NEW ACCESSORY DWELLING UNIT (150 SF)

GENERAL NOTES:

1. GENERAL CONDITIONS OF THE CONTRACT (AIA DOCUMENT A-201) SHALL APPLY TO THIS PROJECT.

2. ALL WORK SHALL COMPLY WITH STATE AND LOCAL BUILDING CODES, FIRE DEPARTMENT REGULATIONS, UTILITY COMPANY STANDARDS, AND THE BEST TRADE PRACTICES.

3. THE GENERAL CONTRACTOR SHALL ARRANGE ALL INSPECTIONS AND TESTS AS SPECIFIED OR REQUIRED BY THE BUILDING DEPARTMENT AND SHALL PAY ALL COSTS AND FEES FOR SAME. THE CONTRACTOR SHALL SECURE ALL BUILDING PERMITS AND UPON COMPLETION OF THE PROJECT (PRIOR TO FINAL PAYMENT) DELIVER TO THE OWNER A CERTIFICATE OF OCCUPANCY OR USE FROM THE BUILDING DEPARTMENT.

4. ALL PLUMBING AND ELECTRICAL WORK SHALL BE PERFORMED BY STATE LICENSED CONTRACTORS. CONTRACTORS SHALL SUBMIT ALL REQUIRED PERMITS, CERTIFICATES, AND SIGN-OFFS TO OWNER AND ARCHITECT FOR THEIR RECORDS.

5. THE GENERAL CONTRACTOR SHALL VERIFY ALL DIMENSIONS, BE FAMILIAR WITH THE EXISTING CONDITIONS, AND BRING ANY DISCREPANCIES TO THE ATTENTION OF THE ARCHITECT PRIOR TO SUBMISSION OF CONSTRUCTION PROPOSAL AND BEFORE BEGINNING WORK. THE DRAWINGS REFLECT CONDITIONS REASONABLY INFERRED FROM THE EXISTING VISIBLE CONDITIONS BUT CANNOT BE GUARANTEED BY THE ARCHITECT. DRAWINGS MAY BE SCALED FOR ESTIMATING PURPOSES AND FOR GENERAL REFERENCE ONLY. FOR ALL OTHER DIMENSIONS OR LOCATIONS CONSULT THE ARCHITECT OR REFER TO DIMENSIONS ON DRAWINGS. VERIFY ALL DIMENSIONS IN THE FIELD.

6. THE GENERAL CONTRACTOR SHALL LAY OUT ALL WORK AND BE RESPONSIBLE FOR ALL DIMENSIONS AND CONDITIONS FOR TRADES SUCH AS ELECTRICAL, PLUMBING, ETC.

7. THE GENERAL CONTRACTOR SHALL PROVIDE AND MAINTAIN ACCESS TO THE PREMISES AT ALL TIMES.

8. THE CONSTRUCTION MANAGER SHALL MAKE THE PREMISES SECURE FROM THE ELEMENTS AND TRESPASS ON A DAILY BASIS.

9. THE GENERAL CONTRACTOR SHALL KEEP THE CONSTRUCTION SITE FREE AND CLEAR OF ALL DEBRIS AND KEEP OUT ALL UNAUTHORIZED PERSONS. UPON COMPLETION OF WORK, THE ENTIRE CONSTRUCTION AREA IS TO BE THOROUGHLY LEANED AND PREPARED FOR OCCUPANCY BY OWNER. ALL MATERIALS AND DEBRIS RESULTING FROM THE CONTRACTOR'S WORK SHALL BE REMOVED FROM THE SITE AND DISPOSED OF PROPERLY. CARE SHALL BE TAKEN DURING CONSTRUCTION THAT NO DEBRIS OR MATERIALS ARE DEPOSITED IN ANY RIGHT OF WAY AREA.

10. THE GENERAL CONTRACTOR SHALL BE RESPONSIBLE FOR PROTECTING ALL EXISTING AND NEW CONDITIONS AND MATERIALS ON THE SITE. ANY DAMAGE CAUSED BY OR DURING THE EXECUTION OF THE WORK IS THE CONTRACTOR'S RESPONSIBILITY AND SHALL BE REPAIRED TO THE OWNER'S SATISFACTION AT THE CONTRACTOR'S EXPENSE.

11. NO CUTTING OR DAMAGE TO BUILDING STRUCTURAL COMPONENTS WILL BE ALLOWED WITHOUT WRITTEN AUTHORIZATION FROM THE ARCHITECT.

12. ALL UTILITIES SHALL BE CONNECTED TO PROVIDE GAS, ELECTRIC, AND WATER TO ALL EQUIPMENT WHETHER SAID EQUIPMENT IS IN CONTRACT OR NOT. EEQUIPMENT SHALL BE GUARANTEED TO FUNCTION PROPERLY UPON COMPLETION.

13. MANUFACTURER'S STANDARD SPECIFICATIONS AND MATERIALS APPROVED FOR PROJECT USE ARE HEREBY MADE PART OF THESE NOTES WITH SAME FORCE AND EFFECT AS IF WRITTEN OUT IN FULL HEREIN. ALL APPLIANCES, FIXTURES, EQUIPMENT, HARDWARE, ETC. SHALL BE INSTALLED IN ACCORDANCE WITH MANUFACTURER'S SPECIFICATIONS AND PROCEDURES.

14. WRITTEN WORDS TAKE PRECEDENCE OVER DRAWN LINES. LARGE-SCALE DETAILS AND PLANS TAKE PRECEDENCE OVER SMALLER DETAILS AND PLANS. SHOULD A CONFLICT ARRIVE BETWEEN THE SPECIFICATIONS AND DRAWINGS, THE REQUIREMENTS DEEMED MOST STRINGENT SHALL BE USED.

15. MINOR DETAILS NOT USUALLY SHOWN OR SPECIFIED BY NECESSARY FOR PROPER AND ACCEPTABLE CONSTRUCTION, INSTALLATION, OR OPERATION OF ANY PART OF THE WORK AS DETERMINED BY THE ARCHITECT SHALL BE INCLUDED IN THE WORK AS IF IT WERE SPECIFIED OR INDICATED ON THE DRAWINGS.

16. ALL ARCHITECTURAL DRAWINGS AND CONSTRUCTION NOTES ARE COMPLIMENTARY. WHAT IS INDICATED AND CALLED FOR BY ONE SHALL BE BINDING AS THOUGH CALLED FOR BY ALL.

17. NO DEVIATION FROM THE DRAWINGS OR SPECIFICATIONS OR INTENT OF SAME SHALL BE MADE WITHOUT THE ARCHITECT'S WRITTEN AUTHORIZATION.

18. ALL WORK SHALL BE GUARANTEED FOR ONE YEAR AFTER FINAL APPROVAL. THE GENERAL CONTRACTOR SHALL SIGN THE WRITTEN GUARANTEE AS PROVIDED BY THE OWNER. THE GUARANTEE SHALL COVER ALL GENERAL AND SUBCONTRACTOR WORK. ALL DEFECTS DISCOVERED DURING THIS PERIOD SHALL BE REPAIRED TO THE OWNER'S SATISFACTION AT THE CONTRACTOR'S EXPENSE.

19. ALL DIMENSIONS ARE TO FACE OF FINISH STUD OR CENTERLINE OF STRUCTURE UNLESS OTHERWISE NOTED.

FIRE SPRINKLER REQUIREMENTS:

PER R313.2 AN AUTOMATIC RESIDENTIAL FIRE SPRINKLER SYSTEM SHALL NOT BE REQUIRED IN ACCESSORY DWELLING UNITS, PROVIDED ALL OF THE FOLLOWING ARE MET:

- THE UNIT MEETS THE DEFINITION OF AN ACCESSORY DWELLING UNIT AS DEFINED IN THE GOVERNMENT
CODE SECTION 65852.2.

- THE EXISTING PRIMARY RESIDENCE DOES NOT HAVE AUTOMATIC FIRE SPRINKLERS.

- THE ACCESSORY DETACHED DWELLING UNIT DOES NOT EXCEED 1,200 SQUARE FEET IN SIZE.

- THE UNIT IS ON THE SAME LOT AS THE PRIMARY RESIDENCE.

FINAL DETERMINATION OF FIRE SPRINKLER REQUIREMENT WILL BE MADE BY LOCAL FIRE JURISDICTION.

GRADING & DRAINAGE NOTES:

- GRADE SHALL FALL A MINIMUM OF 6" IN THE FIRST 10 FEET AWAY FROM NEW FOUNDATION WALLS WHERE THERE IS NO PAVING PER CRC 401.3. WHERE DISTANCE IS LESS THAN 10' WATER SHALL SLOPE AWAY FROM FOUNDATION
- IMPERVIOUS SURFACES WITHIN 10 FEET OF THE BUILDING FOUNDATION SHALL BE SLOPED A MINIMUM OF 2 PERCENT AWAY FROM THE BUILDING.

DISCLAIMER
ALL DIMENSIONS MUST BE VERIFIED BY THE BUILDER AND/OR OWNER.

POSSESSION AND USE OF THESE PLANS, BY A BUILDER AND/OR OWNER SIGNIFIES THAT THEY, THE BUILDER AND/OR OWNER, HAVE ACCEPTED SOLE RESPONSIBILITY FOR COMPLIANCE WITH ALL STATE AND APPLICABLE LOCAL CODES AND LAWS GOVERNING THIS PROPOSED CONSTRUCTION. FURTHER, SUCH BUILDER AND/OR OWNER HAVE ACCEPTED SOLE RESPONSIBILITY FOR SAFE CONSTRUCTION PRACTICES, THE STRUCTURAL INTEGRITY OF THE PROJECT AND, IN THE EVENT OF AN ACCIDENT OR ANY DEVIATION FROM THESE PLANS NULLIFIES AND ABSOLVES, THE ABOVE MENTIONED DESIGN FIRM (THATADUGUY) AND ITS EMPLOYEES, OF ANY RESPONSIBILITY THAT EXISTS.

PROJECT SCOPE:

BUILD NEW, ALL ELECTRIC,150 SF DETACHED ACCESSORY DWELLING UNIT.

PROJECT INFORMATION:

ADDRESS	
APN	
CONSTRUCTION TYPE	V-B
SPRINKLER STATUS	UNSPRINKLERED
ZONING	
OCCUPANCY	R-3
WUI	
STORIES	1
YEAR BUILT	
EXISTING UNITS	
PARCEL AREA	
(E) MAIN RESIDENCE	
(N) ADU	150 SF (1 BED/ 1 BATH)
(N) LOT COVERAGE	

DESIGN CRITERIA

RISK CATEGORY	-II (RESIDENTIAL)
ROOF LOADS,	
DEAD LOAD	-15 PSF
LIVE LOAD	-20 PSF
DESIGN WIND SPEED	-110 MPH
WIND EXPOSURE	-B
SEISMIC DESIGN CATEGORY	-D2
S_{DS}	-0.60
S_{D1}	-0.35
SITE CLASS	-D
ALLOWABLE SOIL BEARING	-1500 PSF

NOTE: These are the assumed structural design parameters for this Master Plan. Site-specific conditions must be verified to meet or fall within these parameters prior to final site permit issuance.

PROJECT DIRECTORY:

OWNER INFO:

NAME:

ADDRESS:

PHONE:

EMAIL:

APPLICANT INFO:

CHECK IF OWNER APPLICANT: ☐

NAME:

ADDRESS:

PHONE:

EMAIL:

SHEET INDEX:

SHEET #	SHEET NAME
A-0.0	TITLE SHEET
A-0.1	CAL GREEN-1
A-0.2	CAL GREEN-2
EN-01	SINGLE FAMILY MANDATORY REQUIREMENTS
A-0.4	SITE PLAN
A-1.0	SETBACK & FIRE DETAILS
A-2.0	FLOOR PLAN
A-2.1	ELECTRICAL & PLUMBING PLAN
A-2.2	ROOF PLAN & INTERIOR SECTIONS
A-3.1	EXTERIOR ELEVATIONS
S-1.0	FOUNDATION & FRAMING PLANS
SD1	STRUCTURAL NOTES
SD2	STRUCTURAL DETAILS
T-24-1	TITLE 24
T-24-2	TITLE 24

REQUIRED HERS (HOME ENERGY RATING SYSTEM) RATER FIELD VERIFICATIONS

ECC FEATURE SUMMARY,
The following is a summary of the features that must be field-verified by a certified ECC Rater as a condition for meeting the modeled energy performance for this computer analysis. Additional detail is provided in the building tables below. Registered CF2Rs and CF3Rs are required to be completed in the ECC Registry

- Indoor air quality ventilation
- Kitchen Exhaust
- Verified Refrigerant Charge
- Verified heat pump rated heating capacity

NOTE:

APPLICANT IS REQUIRED TO PROVIDE A SITE PLAN (INCLUDING ALL EXISTING AND PROPOSED STRUCTURES, SIZES, LOCATIONS, USES, PLANNING DEPT SETBACKS AND ANY PUBLIC UTILITY EASEMENT(S) LOCATIONS, MAIN DWELLING ELECTRICAL PANEL LOCATION FOR A.D.U. SUB-PANEL SITUATIONS, SEWER LINE SIZE AND LOCATION ON SITE WITH CONNECTION LOCATION OF PRIMARY DWELLING SEWER MAIN, WATER SUPPLY LINE SIZE, LOCATION AND CONNECTION) AND INCORPORATE IT INTO THIS PLAN SET PRIOR TO SUBMITTING PLANS

- SEE ELEVATION SHEETS FOR ADDITIONAL INFORMATION/REQUIREMENTS TO PROVIDE DWELLING ADDRESS PER 2025 CRC R319

ABBREVIATIONS:

&	AND	H.B.	HOSE BIBB
∠	ANGLE	H.C.	HOLLOW CORE
@	AT	HR.	HOUR
℄	CENTERLINE	HGT	HEIGHT
ℙ	PROPERTYLINE	HWD	HARDWOOD
#	POUND OR NUMBER	INSUL.	INSULATION
(E)	EXISTING	INT.	INTERIOR
(N)	NEW	KIT.	KITCHEN
(D)	DEMOLISH	LAM.	LAMINATE
ADJ	ADJUSTABLE	LAV.	LAVATORY
AGGR.	AGGREGATE	MAX.	MAXIMUM
ALUM.	ALUMINUM	MECH.	MECHANICAL
APPROX.	APPROXIMATE	MIN.	MINIMUM
ARCH.	ARCHITECTURAL	M.O.	MASONRY OPENING
ASPH.	ASPHALT	N.I.C.	NOT IN CONTRACT
BD	BOARD	NO.	NUMBER
BITUM.	BITUMINOUS	N.T.S.	NOT TO SCALE
BLDG.	BUILDING	O.C.	ON CENTER
BLKG.	BLOCKING	OPNG.	OPENING
BM	BEAM	OPP.	OPPOSITE
CER.	CERAMIC	PL.	PLATE
CLG	CEILING	PLYWD.	PLYWOOD
CLR.	CLEARANCE	PR.	PAIR
CL.	CLOSET	PT	POINT
CLMN.	COLUMN	PART.	PARTITION
CONC.	CONCRETE	P.B.O.	PROVIDED BY OWNER
CONT.	CONTINOUS	R.	RADIUS
CORR.	CORRIDOR	R.D.	ROOF DRAIN
CPT	CARPET	REF.	REFRIGERATOR
DET	DETAIL	REINF.	REINFORCED
D.G.	DOUBLE GARAGE	REQ.	REQUIRED
DIA.	DIAMETER	RM.	ROOM
DIM.	DIMENSION	R.O.	ROUGH OPENING
DN	DOWN	R.W.L.	RAIN WATER LEADER
DR	DOOR	S.C.	SOLID CORE
DRWG.	DRAWING	SHT	SHEET
EA	EACH	SIM.	SIMILAR
E. J.	EXPANSION JOINT	SPEC.	SPECIFICATION
ELEV.	ELEVATION	SQ.	SQUARE
ELEC.	ELECTRICAL	S.O.G.	SLAB ON GRADE
EQ.	EQUAL	S.S.D.	SEE STRUCTURAL DRAWINGS
EXT.	EXTERIOR	S.S	STAINLESS STEEL
F. D.	FLOOR DRAIN	STOR.	STORAGE
FIN	FINISH	SUSP.	SUSPENDED
FLR.	FLOOR	SYM	SYMBOL
FLUOR.	FLUORESCENT	T.O.	TOP OF
F. O. C.	FACE OF CONCRETE	T.O.C.	TOP OF CURB
F. O. F.	FACE OF FINISH	TEL.	TELEPHONE
F. O. S.	FACE OF STUDS	T.& G.	TONGUE AND GROOVE
FT.	FOOT OR FEET	T.O.W.	TOP OF WALL
FTG.	FOOTING	TYP	TYPICAL
FURR.	FURRING	U.G.	UNDERGROUND
GA	GAUGE	U.O.N.	UNLESS OTHERWISE NOTED
GALV.	GALVANIZED	VEST.	VESTIBULE
GL.	GLASS	W/	WITH
GYP	GYPSUM	W.C.	WATER CLOSET
		WD	WOOD
		W/O	WITHOUT

CODE COMPLIANCE:

2025 CALIFORNIA RESIDENTIAL CODE (CRC)
2025 CALIFORNIA BUILDING CODE (CBC)
2025 CALIFORNIA ELECTRICAL CODE (CEC)
2025 CALIFORNIA MECHANICAL CODE (CMC)
2025 CALIFORNIA PLUMBING CODE (CPC)
2025 CALIFORNIA ENERGY CODE (CEnC)
2025 CALIFORNIA FIRE CODE (CFC)
2025 CALIFORNIA GREEN BUILDING STANDARD CODE (CALGreen)

That ADU Guy LLC

THATADUGUY.COM

Designer signature,
C P Dharmasenage

NEW ACCESSORY DWELLING UNIT

REVISIONS

No.	Description	Date
1	Revision 1	

TITLE SHEET

Project number	N/A
Date	05/24/26
Drawn by	C P DHARMASENAGE
Checked by	Checker

A-0.0

Scale

11/15/2026 10:44:14 AM

2025 CALIFORNIA GREEN BUILDING STANDARDS CODE
RESIDENTIAL MANDATORY MEASURES, SHEET 1

Y = YES
N/A = NOT APPLICABLE
RESPON. PARTY = RESPONSIBLE PARTY (ie: ARCHITECT, ENGINEER, OWNER, CONTRACTOR, INSPECTOR ETC.)

CHAPTER 3
GREEN BUILDING
SECTION 301 GENERAL

301.1 SCOPE. Buildings shall be designed to include the green building measures specified as mandatory in the application checklists contained in this code. Voluntary green building measures are also included in the application checklists and may be included in the design and construction of structures covered by this code, but are not required unless adopted by a city, county, or city and county as specified in Section 101.7.

301.1.1 Additions and alterations. [HCD] The mandatory provisions of Chapter 4 shall be applied to additions or alterations of existing residential buildings where the addition or alteration increases the building's conditioned area, volume, or size. The requirements shall apply only to and/or within the specific area of the addition or alteration.

The mandatory provision of Section 4.106.4.2 may apply to additions or alterations of existing parking facilities or the addition of new parking facilities serving existing multifamily buildings. See Section 4.106.4.3 for application.

Note: Repairs including, but not limited to, resurfacing, restriping and repairing or maintaining existing lighting fixtures are not considered alterations for the purpose of this section.

Note: On and after January 1, 2014, residential buildings undergoing permitted alterations, additions, or improvements shall replace noncompliant plumbing fixtures with water-conserving plumbing fixtures. Plumbing fixture replacement is required prior to issuance of a certificate of final completion, certificate of occupancy or final permit approval by the local building department. See Civil Code Section 1101.1, et seq., for the definition of a noncompliant plumbing fixture, types of residential buildings affected and other important enactment dates.

301.2 LOW-RISE AND HIGH-RISE RESIDENTIAL BUILDINGS. [HCD] The provisions of individual sections of CALGreen may apply to either low-rise residential buildings high-rise residential buildings, or both. Individual sections will be designated by banners to indicate where the section applies specifically to low-rise only (LR) or high-rise only (HR). When the section applies to both low-rise and high-rise buildings, no banner will be used.

SECTION 302 MIXED OCCUPANCY BUILDINGS

302.1 MIXED OCCUPANCY BUILDINGS. In mixed occupancy buildings, each portion of a building shall comply with the specific green building measures applicable to each specific occupancy.
Exceptions:
1. [HCD] Accessory structures and accessory occupancies serving residential buildings shall comply with Chapter 4 and Appendix A4, as applicable.
2. [HCD] For purposes of *CALGreen*, live/work units, complying with Section 419 of the *California Building Code*, shall not be considered mixed occupancies. Live/Work units shall comply with Chapter 4 and Appendix A4, as applicable.

DIVISION 4.1 PLANNING AND DESIGN

ABBREVIATION DEFINITIONS:

HCD	Department of Housing and Community Development
BSC	California Building Standards Commission
DSA-SS	Division of the State Architect, Structural Safety
OSHPD	Office of Statewide Health Planning and Development
LR	Low Rise
HR	High Rise
AA	Additions and Alterations
N	New

CHAPTER 4
RESIDENTIAL MANDATORY MEASURES

SECTION 4.102 DEFINITIONS

4.102.1 DEFINITIONS
The following terms are defined in Chapter 2 *(and are included here for reference)*

FRENCH DRAIN. A trench, hole or other depressed area loosely filled with rock, gravel, fragments of brick or similar pervious material used to collect or channel drainage or runoff water.

WATTLES. Wattles are used to reduce sediment in runoff. Wattles are often constructed of natural plant materials such as hay, straw or similar material shaped in the form of tubes and placed on a downflow slope. Wattles are also used for perimeter and inlet controls.

4.106 SITE DEVELOPMENT

4.106.1 GENERAL. Preservation and use of available natural resources shall be accomplished through evaluation and careful planning to minimize negative effects on the site and adjacent areas. Preservation of slopes, management of storm water drainage and erosion controls shall comply with this section.

4.106.2 STORM WATER DRAINAGE AND RETENTION DURING CONSTRUCTION. Projects which disturb less than one acre of soil and are not part of a larger common plan of development which in total disturbs one acre or more, shall manage storm water drainage during construction. In order to manage storm water drainage during construction, one or more of the following measures shall be implemented to prevent flooding of adjacent property, prevent erosion and retain soil runoff on the site.

1. Retention basins of sufficient size shall be utilized to retain storm water on the site.
2. Where storm water is conveyed to a public drainage system, collection point, gutter or similar disposal method, water shall be filtered by use of a barrier system, wattle or other method approved by the enforcing agency.
3. Compliance with a lawfully enacted storm water management ordinance.

Note: Refer to the State Water Resources Control Board for projects which disturb one acre or more of soil, or are part of a larger common plan of development which in total disturbs one acre or more of soil.

(Website: https://www.waterboards.ca.gov/water_issues/programs/stormwater/construction.html)

4.106.3 GRADING AND PAVING. Construction plans shall indicate how the site grading or drainage system will manage all surface water flows to keep water from entering buildings. Examples of methods to manage surface water include, but are not limited to, the following:

1. Swales
2. Water collection and disposal systems
3. French drains
4. Water retention gardens
5. Other water measures which keep surface water away from buildings and aid in groundwater recharge.

Exception: Additions and alterations not altering the drainage path.

4.106.4 Electric vehicle (EV) charging for new construction. New construction shall comply with Section 4.106.4.1 or 4.106.4.2. Electric vehicle supply equipment (EVSE) shall comply with the *California Electrical Code*.

Exceptions:
1. On a case-by-case basis, where the local enforcing agency has determined EV charging and infrastructure are not feasible based upon one or more of the following conditions:
1.1 Where there is no local utility power supply or the local utility is unable to supply adequate power.
1.2 Where there is evidence suitable to the local enforcing agency substantiating that additional local utility infrastructure design requirements, directly related to the implementation of Section 4.106.4, may adversely impact the construction cost of the project.
2. Accessory Dwelling Units (ADU) and Junior Accessory Dwelling Units (JADU) without additional parking facilities.

4.106.4.1 New one- and two-family dwellings and townhouses with attached private garages. For each dwelling unit, install a listed raceway to accommodate a dedicated 208/240-volt branch circuit. The raceway shall not be less than trade size 1 (nominal 1-inch inside diameter). The raceway shall originate at the main service or subpanel and shall terminate into a listed cabinet, box or other enclosure in close proximity to the proposed location of an EV charger. Raceways are required to be continuous at enclosed, inaccessible or concealed areas and spaces. The service panel and/or subpanel shall provide capacity to install a 40-ampere 208/240-volt minimum dedicated branch circuit and space(s) reserved to permit installation of a branch circuit overcurrent protective device.

Exemption: A raceway is not required if a minimum 40-ampere 208/240-volt dedicated EV branch circuit is installed in close proximity to the proposed location of an EV charger at the time of original construction in accordance with the *California Electrical Code*.

4.106.4.1.1 Identification. The service panel or subpanel circuit directory shall identify the overcurrent protective device space(s) reserved for future EV charging as "EV CAPABLE". The raceway termination location shall be permanently and visibly marked as "EV CAPABLE".

4.106.4.2 New multifamily dwellings, hotels and motels and new residential parking facilities.
When parking is provided, parking spaces for new multifamily dwellings, hotels and motels shall meet the requirements of Section 4.106.4.2.2. Calculations for spaces shall be rounded up to the nearest whole number. A parking space served by electric vehicle supply equipment or designed as an EV charging space shall count as at least one standard automobile parking space only for the purpose of complying with any applicable minimum parking space requirements established by a local jurisdiction. See Vehicle Code Section 22511.2 for further details.

4.106.4.2.1 Reserved.

4.106.4.2.2 Multifamily dwellings, hotels and motels

1. EV ready parking spaces with receptacles.

a. Multifamily parking facilities with assigned parking. Where dwelling units are provided with assigned parking spaces equal to or greater than the number of dwelling units, at least one low power Level 2 EV charging receptacle shall be provided at an assigned parking space for each dwelling unit.

1. Where the total number of dwelling units exceeds the number of assigned parking spaces, all assigned parking spaces shall be provided with one low power Level 2 EV charging receptacle.

Exception: Areas of parking facilities served by parking lifts, including but not limited to, automated mechanical-access open parking garages as defined in the California Building Code; or parking facilities otherwise incapable of supporting electric vehicle charging.

b. Multifamily parking facilities with unassigned parking. Where dwelling units are provided with unassigned parking spaces equal to or greater than the number of dwelling units, at least one low power Level 2 EV charging receptacle shall be provided at an unassigned parking space for each dwelling unit.

1. Where the total number of dwelling units exceeds the number of unassigned parking spaces, all unassigned parking spaces shall be provided with one low power Level 2 EV charging receptacle.

Exception: Areas of parking facilities served by parking lifts, including but not limited to, automated mechanical-access open parking garages as defined in the California Building Code; or parking facilities otherwise incapable of supporting electric vehicle charging.

3. Multifamily parking facilities with assigned and unassigned parking. Where multifamily buildings are provided with both assigned and unassigned parking spaces equal to or greater than the number of dwelling units, at least one low power Level 2 EV charging receptacle shall be provided for each dwelling unit at either the assigned or unassigned parking space, but not both.

d. Receptacle power source. EV charging receptacles in multifamily parking facilities at assigned parking spaces shall be provided with a dedicated branch circuit connected to the dwelling unit's electrical panel, unless determined as infeasible by the project builder or designer and subject to concurrence of the local enforcing agency.

Exception: Areas of parking facilities served by parking lifts, including but not limited to, automated mechanical-access open parking garages as defined in the California Building Code; or parking facilities otherwise incapable of supporting electric vehicle charging.

e. Receptacle configurations. 208/240V EV charging receptacles shall comply with one of the following configurations:
1. For 20-ampere receptacles, NEMA 6-20R
2. For 30-ampere receptacles, NEMA 14-30R
3. For 50-ampere receptacles, NEMA 14-50R

2. EV ready parking spaces with EV chargers

a .Multifamily parking facilities with unassigned or common use parking. In addition to the low power Level 2 EV charging receptacle requirements of Section 4.106.4.2.2 (1), twenty-five (25) percent of unassigned or common use parking spaces not already provided with low power Level 2 EV charging receptacles, pursuant to Section 4.106.4.2.2 (1), shall be equipped with Level 2 EV chargers and shall be made available for use by all residents or guests.

b. EV charger connectors. EV chargers shall be equipped with J1772 or J3400 connectors.

c. An automatic load management system (ALMS) may be used to reduce the maximum required electrical capacity to each space served by the ALMS. The electrical system and any on-site distribution transformers shall have sufficient capacity to deliver at least 3.3 kW simultaneously to each EV charging station (EVCS) served by the ALMS. The branch circuit shall have a minimum capacity of 40 amperes, and installed EV chargers shall have a capacity of not less than 30 amperes.

4.106.4.2.2.1 Electric vehicle charging stations (EVCS).
Electric vehicle charging stations required by Section 4.106.4.2.2, Item 2, with EV chargers installed shall comply with Section 4.106.4.2.2.1.1.

Exception: Electric vehicle charging stations serving public accommodations, public housing, motels and hotels shall not be required to comply with this section. See *California Building Code*, Chapter 11B, for applicable requirements.

4.106.4.2.2.1.1 Electric vehicle charging stations (EVCS) spaces with EV chargers installed; dimensions and location.

EVCS spaces shall be designed to comply with the following:

1. The minimum length of each EVCS space shall be 18 feet (5486 mm).
2. The minimum width of each EVCS space shall be 9 feet (2743 mm).
3. One in every 25 EVCS spaces, but not less than one, shall also have an 8-foot (2438 mm) wide minimum aisle. A 5-foot (1524 mm) wide minimum aisle shall be permitted provided the minimum width of the EVCS space is 12 feet (3658 mm). Surface slope for this EVCS space and the aisle shall not exceed 1 unit vertical in 48 units horizontal (2.083 percent slope) in any direction. These EVCS spaces shall also comply with at least one of the following:

a. The EVCS space shall be located adjacent to an accessible parking space meeting the requirements of the *California Building Code*, Chapter 11A, to allow use of the EV charger from the accessible parking space.

b. The EVCS space shall be located on an accessible route, as defined in the *California Building Code*, Chapter 2, to the building.

Exception: Electric vehicle charging stations designed and constructed in compliance with the *California Building Code*, Chapter 11B, are not required to comply with Section 4.106.4.2.2.1.1.

4.106.4.2.2.1.2 Accessible electric vehicle charging station spaces.
In addition to the requirements in Section 4.106.4.2.2.1.1, all EV chargers, where installed, shall comply with the accessibility provisions for EV chargers in the *California Building Code*, Chapter 11B. EV ready spaces and EVCS in multifamily developments shall comply with *California Building Code*, Chapter 11A, Section 1109A.

4.106.4.2.3 Reserved.

4.106.4.2.4 Reserved.

4.106.4.2.5 Electric vehicle ready space signage.
Electric vehicle ready spaces shall be identified by signage or pavement markings, in compliance with Caltrans Traffic Operations Policy Directive 13-01 (Zero Emission Vehicle Signs and Pavement Markings) or its successor(s).

4.106.4.2.6 Hotels and motels.

1. EV ready parking spaces with receptacles.

a. Hotels and motels. Forty (40) percent of the total number of parking spaces shall be equipped with low power Level 2 EV charging receptacles.

Exception: Areas of parking facilities served by parking lifts, including but not limited to automated mechanical-access open parking garages as defined in the California Building Code; or parking facilities otherwise incapable of supporting electric vehicle charging.

b. Receptacle configurations. 208/240V EV charging receptacles shall comply with one of the following configurations:
1.For 20- ampere receptacles, NEMA 6-20R
2.For 30- ampere receptacles, NEMA 14-30R
3.For 50- ampere receptacles, NEMA 14-50R2.

2. EV Ready parking spaces with EV chargers.

a. Hotels and motels. Twenty-five (25) percent of the total number of parking spaces shall be equipped with Level 2 EV chargers.

b. EV charger connectors. EV chargers shall be equipped with J1772 or J3400 connectors.

Exception: Areas of parking facilities served by parking lifts, including but not limited to, automated mechanical-access open parking garages as defined in the California Building Code; or parking facilities otherwise incapable of supporting electric vehicle charging.

c. An automatic load management system (ALMS) may be used to reduce the maximum required electrical capacity to each space served by the ALMS. The electrical system and any on-site distribution transformers shall have sufficient capacity to deliver at least 3.3 kW simultaneously to each EV charging station (EVCS) served by the ALMS. The branch circuit shall have a minimum capacity of 40 amperes, and installed EV chargers shall have a capacity of not less than 30 amperes.

4.106.4.3 Electric vehicle charging for additions and alterations of parking facilities serving existing multi-family buildings, hotels and motels.
When existing parking facilities are altered or new parking spaces are added to existing parking facilities, and the work requires a building permit, each parking space added or altered shall have access to either a low power Level 2 EV charging receptacle or Level 2 EV charger, unless determined as infeasible by the project builder or designer and subject to concurrence of the local enforcing agency.

Exception: Where work requiring a permit is being performed for the installation of 120-volt electrical receptacle(s) for level 1 EV charging.

4.106.4.4 Bicycle parking. Bicycle parking shall comply with Sections 4.106.4.4.1 through 4.106.4.4.3.

4.106.4.4.1 Short-term bicycle parking for multifamily buildings, hotels and motels. Provide on-site bicycle parking at a ratio of one parking space for every 10,000 square feet, but not less than two spaces. Short-term bicycle parking shall be located within 200 feet of building entrances, and readily visible to passers-by. Acceptable parking facilities shall be conveniently accessed from the street and may include, but not be limited to:
1.Permanently anchored bicycle parking devices, racks, or lockers in an unsheltered, open area.
2.Covered or uncovered enclosures with permanently anchored bicycle parking devices or racks.

4.106.4.4.2 Long-term bicycle parking for multifamily buildings.
Provide on-site bicycle parking at a ratio of one parking space for every two dwelling units. Acceptable parking facilities shall be conveniently accessed from the street and may include, but not be limited to:
1. Covered, lockable enclosures with permanently anchored bicycle parking devices or racks.
2. Lockable bicycle storage rooms with permanently anchored bicycle parking devices or racks.
3. Lockable, weatherproof, permanently anchored bicycle lockers.

4.106.4.4.3 Long-term bicycle parking for hotel and motel buildings.
Provide one on-site long-term bicycle parking space for every 25,000 square feet, but not less than two. Acceptable parking facilities shall be conveniently accessed from the street and may include, but not be limited to:
1. Covered, lockable enclosures with permanently anchored bicycle parking devices or racks.
2. Lockable bicycle storage rooms with permanently anchored bicycle parking devices or racks.
3. Lockable, weatherproof, permanently anchored bicycle lockers.

DIVISION 4.2 ENERGY EFFICIENCY

4.201 GENERAL

4.201.1 SCOPE. For the purposes of mandatory energy efficiency standards in this code, the California Energy Commission will continue to adopt mandatory standards.

DIVISION 4.3 WATER EFFICIENCY AND CONSERVATION

4.303 INDOOR WATER USE

4.303.1 WATER CONSERVING PLUMBING FIXTURES AND FITTINGS. Plumbing fixtures (water closets and urinals) and fittings (faucets and showerheads) shall comply with the sections 4.303.1.1, 4.303.1.2, 4.303.1.3, and 4.303.4.4.

Note: All noncompliant plumbing fixtures in any residential real property shall be replaced with water-conserving plumbing fixtures. Plumbing fixture replacement is required prior to issuance of a certificate of final completion, certificate of occupancy, or final permit approval by the local building department. See Civil Code Section 1101.1, et seq., for the definition of a noncompliant plumbing fixture, types of residential buildings affected and other important enactment dates.

4.303.1.1 Water Closets. The effective flush volume of all water closets shall not exceed 1.28 gallons per flush. Tank-type water closets shall be certified to the performance criteria of the U.S. EPA WaterSense Specification for Tank-type Toilets.

Note: The effective flush volume of dual flush toilets is defined as the composite, average flush volume of two reduced flushes and one full flush.

4.303.1.2 Urinals. The effective flush volume of wall mounted urinals shall not exceed 0.125 gallons per flush. The effective flush volume of all other urinals shall not exceed 0.5 gallons per flush.

4.303.1.3 Showerheads.

4.303.1.3.1 Single Showerhead. Showerheads shall have a maximum flow rate of not more than 1.8 gallons per minute at 80 psi. Showerheads shall be certified to the performance criteria of the U.S. EPA WaterSense Specification for Showerheads.

4.303.1.3.2 Multiple showerheads serving one shower. When a shower is served by more than one showerhead, the combined flow rate of all the showerheads and/or other shower outlets controlled by a single valve shall not exceed 1.8 gallons per minute at 80 psi, or the shower shall be designed to only allow one shower outlet to be in operation at a time.

Note: A hand-held shower shall be considered a showerhead.

4.303.1.4 Faucets.

4.303.1.4.1 Residential Lavatory Faucets. The maximum flow rate of residential lavatory faucets shall not exceed 1.2 gallons per minute at 60 psi. The minimum flow rate of residential lavatory faucets shall not be less than 0.8 gallons per minute at 20 psi.

4.303.1.4.2 Lavatory Faucets in Common and Public Use Areas. The maximum flow rate of lavatory faucets installed in common and public use areas (outside of dwellings or sleeping units) in residential buildings shall not exceed 0.5 gallons per minute at 60 psi.

4.303.1.4.3 Metering Faucets. Metering faucets when installed in residential buildings shall not deliver more than 0.2 gallons per cycle.

4.303.1.4.4 Kitchen Faucets. The maximum flow rate of kitchen faucets shall not exceed 1.8 gallons per minute at 60 psi. Kitchen faucets may temporarily increase the flow above the maximum rate, but not to exceed 2.2 gallons per minute at 60 psi, and must default to a maximum flow rate of 1.8 gallons per minute at 60 psi.

Note: Where complying faucets are unavailable, aerators or other means may be used to achieve reduction.

4.303.1.4.5 Pre-rinse spray valves.
When installed, commercial pre-rinse spray values shall meet the requirements in the California Plumbing Code, Section 420.3.

4.303.2 Submeters for multifamily buildings and dwelling units in mixed-used residential/commercial buildings.
Submeters shall be installed to measure water usage of individual rental dwelling units in accordance with the *California Plumbing Code*.

4.303.3 Standards for plumbing fixtures and fittings. Plumbing fixtures and fittings shall be installed in accordance with the *California Plumbing Code*, and shall meet the applicable standards referenced in Table 1701.1 of the *California Plumbing Code*.

4.304 OUTDOOR WATER USE

4.304.1 OUTDOOR POTABLE WATER USE IN LANDSCAPE AREAS. Residential developments shall comply with a local water efficient landscape ordinance or the current California Department of Water Resources' Model Water Efficient Landscape Ordinance (MWELO), whichever is more stringent.

NOTES:

1. The Model Water Efficient Landscape Ordinance (MWELO) is located in the *California Code Regulations*, Title 23, Chapter 2.7, Division 2. MWELO and supporting documents, including water budget calculator, are available at: https://www.water.ca.gov/

DIVISION 4.4 MATERIAL CONSERVATION AND RESOURCE EFFICIENCY

4.406 ENHANCED DURABILITY AND REDUCED MAINTENANCE

4.406.1 RODENT PROOFING. Annular spaces around pipes, electric cables, conduits or other openings in sole/bottom plates at exterior walls shall be protected against the passage of rodents by closing such openings with cement mortar, concrete masonry or a similar method acceptable to the enforcing agency.

4.408 CONSTRUCTION WASTE REDUCTION, DISPOSAL AND RECYCLING

4.408.1 CONSTRUCTION WASTE MANAGEMENT. Recycle and/or salvage for reuse a minimum of 65 percent of the non-hazardous construction and demolition waste in accordance with either Section 4.408.2, 4.408.3 or 4.408.4, or meet a more stringent local construction and demolition waste management ordinance.

Exceptions:

1. Excavated soil and land-clearing debris.
2. Alternate waste reduction methods developed by working with local agencies if diversion or recycle facilities capable of compliance with this item do not exist or are not located reasonably close to the jobsite.
3. The enforcing agency may make exceptions to the requirements of this section when isolated jobsites are located in areas beyond the haul boundaries of the diversion facility.

4.408.2 CONSTRUCTION WASTE MANAGEMENT PLAN. Submit a construction waste management plan in conformance with Items 1 through 5. The construction waste management plan shall be updated as necessary and shall be available during construction for examination by the enforcing agency.

1. Identify the construction and demolition waste materials to be diverted from disposal by recycling, reuse on the project or salvage for future use or sale.
2. Specify if construction and demolition waste materials will be sorted on-site (source separated) or bulk mixed (single stream).
3. Identify diversion facilities where the construction and demolition waste material collected will be taken.
4. Identify construction methods employed to reduce the amount of construction and demolition waste generated.
5. Specify that the amount of construction and demolition waste materials diverted shall be calculated by weight or volume, but not by both.

4.408.3 WASTE MANAGEMENT COMPANY. Utilize a waste management company, approved by the enforcing agency, which can provide verifiable documentation that the percentage of construction and demolition waste material diverted from the landfill complies with Section 4.408.1.

Note: The owner or contractor may make the determination if the construction and demolition waste materials will be diverted by a waste management company.

4.408.4 WASTE STREAM REDUCTION ALTERNATIVE [LR]. Projects that generate a total combined weight of construction and demolition waste disposed of in landfills, which do not exceed 3.4 lbs./sq.ft. of the building area shall meet the minimum 65% construction waste reduction requirement in Section 4.408.1

4.408.4.1 WASTE STREAM REDUCTION ALTERNATIVE. Projects that generate a total combined weight of construction and demolition waste disposed of in landfills, which do not exceed 2 pounds per square foot of the building area, shall meet the minimum 65% construction waste reduction requirement in Section 4.408.1

4.408.5 DOCUMENTATION. Documentation shall be provided to the enforcing agency which demonstrates compliance with Section 4.408.2, items 1 through 5, Section 4.408.3 or Section 4.408.4..

Notes:

1. Sample forms found in "A Guide to the California Green Building Standards Code (Residential)" located at www.hcd.ca.gov/CALGreen.html may be used to assist in documenting compliance with this section.
2. Mixed construction and demolition debris (C & D) processors can be located at the California Department of Resources Recycling and Recovery (CalRecycle).

4.410 BUILDING MAINTENANCE AND OPERATION

4.410.1 OPERATION AND MAINTENANCE MANUAL. At the time of final inspection, a manual, compact disc, web-based reference or other media acceptable to the enforcing agency which includes all of the following shall be placed in the building:

1. Directions to the owner or occupant that the manual shall remain with the building throughout the life cycle of the structure.
2. Operation and maintenance instructions for the following:
   a. Equipment and appliances, including water-saving devices and systems, HVAC systems, photovoltaic systems, electric vehicle chargers, water-heating systems and other major appliances and equipment.
   b. Roof and yard drainage, including gutters and downspouts.
   c. Space conditioning systems, including condensers and air filters.
   d. Landscape irrigation systems.
   e. Water reuse systems.
3. Information from local utility, water and waste recovery providers on methods to further reduce resource consumption, including recycle programs and locations.
4. Public transportation and/or carpool options available in the area.
5. Educational material on the positive impacts of an interior relative humidity between 30-60 percent and what methods an occupant may use to maintain the relative humidity level in that range.
6. Information about water-conserving landscape and irrigation design and controllers which conserve water.
7. Instructions for maintaining gutters and downspouts and the importance of diverting water at least 5 feet away from the foundation.
8. Information on required routine maintenance measures, including, but not limited to, caulking, painting, grading around the building, etc.
9. Information about state solar energy and incentive programs available.
10. A copy of all special inspections verifications required by the enforcing agency or this code.
11. Information from the Department of Forestry and Fire Protection on maintenance of defensible space around residential structures.
12. Information and/or drawings identifying the location of grab bar reinforcements.

4.410.2 RECYCLING BY OCCUPANTS. Where 5 or more multifamily dwelling units are constructed on a building site, provide readily accessible area(s) that serves all buildings on the site and are identified for the depositing, storage and collection of non-hazardous materials for recycling, including (at a minimum) paper, corrugated cardboard, glass, plastics, organic waster, and metals, or meet a lawfully enacted local recycling ordinance, if more restrictive.

Exception: Rural jurisdictions that meet and apply for the exemption in Public Resources Code Section 42649.82 (a)(2)(A) et seq. are note required to comply with the organic waste portion of this section.

DIVISION 4.5 ENVIRONMENTAL QUALITY

SECTION 4.501 GENERAL

4.501.1 Scope
The provisions of this chapter shall outline means of reducing the quality of air contaminants that are odorous, irritating and/or harmful to the comfort and well being of a building's installers, occupants and neighbors.

SECTION 4.502 DEFINITIONS

5.102.1 DEFINITIONS
The following terms are defined in Chapter 2 *(and are included here for reference)*

AGRIFIBER PRODUCTS. Agrifiber products include wheatboard, strawboard, panel substrates and door cores, not including furniture, fixtures and equipment (FF&E) not considered base building elements.

COMPOSITE WOOD PRODUCTS. Composite wood products include hardwood plywood, particleboard and medium density fiberboard. "Composite wood products" does not include hardboard, structural plywood, structural panels, structural composite lumber, oriented strand board, glued laminated timber, prefabricated wood I-joists or finger-jointed lumber, all as specified in California Code of regulations (CCR), title 17, Section 93120.1.

DIRECT-VENT APPLIANCE. A fuel-burning appliance with a sealed combustion system that draws all air for combustion from the outside atmosphere and discharges all flue gases to the outside atmosphere.

DISCLAIMER: *THIS DOCUMENT IS PROVIDED AND INTENDED TO BE USED AS A MEANS TO INDICATE AREAS OF COMPLIANCE WITH THE CALIFORNIA GREEN BUILDING STANDARDS (CALGREEN) CODE. DUE TO THE VARIABLES BETWEEN BUILDING DEPARTMENT JURISDICTIONS, THIS CHECKLIST IS TO BE USED ON AN INDIVIDUAL PROJECT BASIS AND MAY BE MODIFIED BY THE END USER TO MEET THOSE INDIVIDUAL NEEDS. THE END USER ASSUMES ALL RESPONSIBILITY ASSOCIATED WITH THE USE OF THIS DOCUMENT, INCLUDING VERIFICATION WITH THE FULL CODE.*

That ADU Guy LLC
THATADUGUY.COM

Designer signature,
C P Dharmasenage

NEW ACCESSORY DWELLING UNIT

REVISIONS

No.	Description	Date

CAL GREEN-1

Project number	N/A
Date	05/24/26
Drawn by	C P DHARMASENAGE
Checked by	Checker

A-0.1

Scale

11/15/2026 10:44:17 AM

2025 CALIFORNIA GREEN BUILDING STANDARDS CODE
RESIDENTIAL MANDATORY MEASURES, SHEET 2

Y = YES
N/A = NOT APPLICABLE
RESPON. PARTY = RESPONSIBLE PARTY (ie: ARCHITECT, ENGINEER, OWNER, CONTRACTOR, INSPECTOR ETC.)

MAXIMUM INCREMENTAL REACTIVITY (MIR). The maximum change in weight of ozone formed by adding a compound to the "Base Reactive Organic Gas (ROG) Mixture" per weight of compound added, expressed to hundredths of a gram (g O³/g ROC).
Note: MIR values for individual compounds and hydrocarbon solvents are specified in CCR, Title 17, Sections 94700 and 94701.

MOISTURE CONTENT. The weight of the water in wood expressed in percentage of the weight of the oven-dry wood.

PRODUCT-WEIGHTED MIR (PWMIR). The sum of all weighted-MIR for all ingredients in a product subject to this article. The PWMIR is the total product reactivity expressed to hundredths of a gram of ozone formed per gram of product (excluding container and packaging).
Note: PWMIR is calculated according to equations found in CCR, Title 17, Section 94521 (a).

REACTIVE ORGANIC COMPOUND (ROC). Any compound that has the potential, once emitted, to contribute to ozone formation in the troposphere.

VOC. A volatile organic compound (VOC) broadly defined as a chemical compound based on carbon chains or rings with vapor pressures greater than 0.1 millimeters of mercury at room temperature. These compounds typically contain hydrogen and may contain oxygen, nitrogen and other elements. See CCR Title 17, Section 94508(a).

4.503 FIREPLACES

4.503.1 GENERAL. Any installed gas fireplace shall be a direct-vent sealed-combustion type. Any installed woodstove or pellet stove shall comply with U.S. EPA New Source Performance Standards (NSPS) emission limits as applicable, and shall have a permanent label indicating they are certified to meet the emission limits. Woodstoves, pellet stoves and fireplaces shall also comply with applicable local ordinances.

4.504 POLLUTANT CONTROL

4.504.1 COVERING OF DUCT OPENINGS & PROTECTION OF MECHANICAL EQUIPMENT DURING CONSTRUCTION. At the time of rough installation, during storage on the construction site and until final startup of the heating, cooling and ventilating equipment, all duct and other related air distribution component openings shall be covered with tape, plastic, sheet metal or other methods acceptable to the enforcing agency to reduce the amount of water, dust or debris which may enter the system.

4.504.2 FINISH MATERIAL POLLUTANT CONTROL. Finish materials shall comply with this section.

4.504.2.1 Adhesives, Sealants and Caulks. Adhesives, sealant and caulks used on the project shall meet the requirements of the following standards unless more stringent local or regional air pollution or air quality management district rules apply:

1. Adhesives, adhesive bonding primers, adhesive primers, sealants, sealant primers and caulks shall comply with local or regional air pollution control or air quality management district rules where applicable or SCAQMD Rule 1168 VOC limits, as shown in Table 4.504.1 or 4.504.2, as applicable. Such products also shall comply with the Rule 1168 prohibition on the use of certain toxic compounds (chloroform, ethylene dichloride, methylene chloride, perchloroethylene and tricloroethylene), except for aerosol products, as specified in Subsection 2 below.
2. Aerosol adhesives, and smaller unit sizes of adhesives, and sealant or caulking compounds (in units of product, less packaging, which do not weigh more than 1 pound and do not consist of more than 16 fluid ounces) shall comply with statewide VOC standards and other requirements, including prohibitions on use of certain toxic compounds, of *California Code of Regulations*, Title 17, commencing with section 94507.

4.504.2.2 Paints and Coatings. Architectural paints and coatings shall comply with VOC limits in Table 1 of the ARB Architectural Suggested Control Measure, as shown in Table 4.504.3, unless more stringent local limits apply. The VOC content limit for coatings that do not meet the definitions for the specialty coatings categories listed in Table 4.504.3 shall be determined by classifying the coating as a Flat, Nonflat or Nonflat-High Gloss coating, based on its gloss, as defined in subsections 4.21, 4.36, and 4.37 of the 2007 California Air Resources Board, Suggested Control Measure, and the corresponding Flat, Nonflat or Nonflat-High Gloss VOC limit in Table 4.504.3 shall apply.

4.504.2.3 Aerosol Paints and Coatings. Aerosol paints and coatings shall meet the Product-weighted MIR Limits for ROC in Section 94522(a)(2) and other requirements, including prohibitions on use of certain toxic compounds and ozone depleting substances, in Sections 94522(e)(1) and (f)(1) of *California Code of Regulations*, Title 17, commencing with Section 94520; and in areas under the jurisdiction of the Bay Area Air Quality Management District additionally comply with the percent VOC by weight of product limits of Regulation 8, Rule 49.

4.504.2.4 Verification. Verification of compliance with this section shall be provided at the request of the enforcing agency. Documentation may include, but is not limited to, the following:

1. Manufacturer's product specification.
2. Field verification of on-site product containers.

TABLE 4.504.1 - ADHESIVE VOC LIMIT[1,2]

(Less Water and Less Exempt Compounds in Grams per Liter)

ARCHITECTURAL APPLICATIONS	VOC LIMIT
INDOOR CARPET ADHESIVES	50
CARPET PAD ADHESIVES	50
OUTDOOR CARPET ADHESIVES	150
WOOD FLOORING ADHESIVES	100
RUBBER FLOOR ADHESIVES	60
SUBFLOOR ADHESIVES	50
CERAMIC TILE ADHESIVES	65
VCT & ASPHALT TILE ADHESIVES	50
DRYWALL & PANEL ADHESIVES	50
COVE BASE ADHESIVES	50
MULTIPURPOSE CONSTRUCTION ADHESIVE	70
STRUCTURAL GLAZING ADHESIVES	100
SINGLE-PLY ROOF MEMBRANE ADHESIVES	250
OTHER ADHESIVES NOT LISTED	50
SPECIALTY APPLICATIONS	
PVC WELDING	510
CPVC WELDING	490
ABS WELDING	325
PLASTIC CEMENT WELDING	250
ADHESIVE PRIMER FOR PLASTIC	550
CONTACT ADHESIVE	80
SPECIAL PURPOSE CONTACT ADHESIVE	250
STRUCTURAL WOOD MEMBER ADHESIVE	140
TOP & TRIM ADHESIVE	250
SUBSTRATE SPECIFIC APPLICATIONS	
METAL TO METAL	30
PLASTIC FOAMS	50
POROUS MATERIAL (EXCEPT WOOD)	50
WOOD	30
FIBERGLASS	80

1. IF AN ADHESIVE IS USED TO BOND DISSIMILAR SUBSTRATES TOGETHER, THE ADHESIVE WITH THE HIGHEST VOC CONTENT SHALL BE ALLOWED.

2. FOR ADDITIONAL INFORMATION REGARDING METHODS TO MEASURE THE VOC CONTENT SPECIFIED IN THIS TABLE, SEE SOUTH COAST AIR QUALITY MANAGEMENT DISTRICT RULE 1168.

TABLE 4.504.2 - SEALANT VOC LIMIT

(Less Water and Less Exempt Compounds in Grams per Liter)

SEALANTS	VOC LIMIT
ARCHITECTURAL	250
MARINE DECK	760
NONMEMBRANE ROOF	300
ROADWAY	250
SINGLE-PLY ROOF MEMBRANE	450
OTHER	420
SEALANT PRIMERS	
ARCHITECTURAL	
NON-POROUS	250
POROUS	775
MODIFIED BITUMINOUS	500
MARINE DECK	760
OTHER	750

TABLE 4.504.3 - VOC CONTENT LIMITS FOR ARCHITECTURAL COATINGS[2,3]

GRAMS OF VOC PER LITER OF COATING, LESS WATER & LESS EXEMPT COMPOUNDS

COATING CATEGORY	VOC LIMIT
FLAT COATINGS	50
NON-FLAT COATINGS	100
NONFLAT-HIGH GLOSS COATINGS	150
SPECIALTY COATINGS	
ALUMINUM ROOF COATINGS	400
BASEMENT SPECIALTY COATINGS	400
BITUMINOUS ROOF COATINGS	50
BITUMINOUS ROOF PRIMERS	350
BOND BREAKERS	350
CONCRETE CURING COMPOUNDS	350
CONCRETE/MASONRY SEALERS	100
DRIVEWAY SEALERS	50
DRY FOG COATINGS	150
FAUX FINISHING COATINGS	350
FIRE RESISTIVE COATINGS	350
FLOOR COATINGS	100
FORM-RELEASE COMPOUNDS	250
GRAPHIC ARTS COATINGS (SIGN PAINTS)	500
HIGH TEMPERATURE COATINGS	420
INDUSTRIAL MAINTENANCE COATINGS	250
LOW SOLIDS COATINGS[1]	120
MAGNESITE CEMENT COATINGS	450
MASTIC TEXTURE COATINGS	100
METALLIC PIGMENTED COATINGS	500
MULTICOLOR COATINGS	250
PRETREATMENT WASH PRIMERS	420
PRIMERS, SEALERS, & UNDERCOATERS	100
REACTIVE PENETRATING SEALERS	350
RECYCLED COATINGS	250
ROOF COATINGS	50
RUST PREVENTATIVE COATINGS	250
SHELLACS	
CLEAR	730
OPAQUE	550
SPECIALTY PRIMERS, SEALERS & UNDERCOATERS	100
STAINS	250
STONE CONSOLIDANTS	450
SWIMMING POOL COATINGS	340
TRAFFIC MARKING COATINGS	100
TUB & TILE REFINISH COATINGS	420
WATERPROOFING MEMBRANES	250
WOOD COATINGS	275
WOOD PRESERVATIVES	350
ZINC-RICH PRIMERS	340

1. GRAMS OF VOC PER LITER OF COATING, INCLUDING WATER & EXEMPT COMPOUNDS

2. THE SPECIFIED LIMITS REMAIN IN EFFECT UNLESS REVISED LIMITS ARE LISTED IN SUBSEQUENT COLUMNS IN THE TABLE.

3. VALUES IN THIS TABLE ARE DERIVED FROM THOSE SPECIFIED BY THE CALIFORNIA AIR RESOURCES BOARD, ARCHITECTURAL COATINGS SUGGESTED CONTROL MEASURE, FEB. 1, 2008. MORE INFORMATION IS AVAILABLE FROM THE AIR RESOURCES BOARD.

TABLE 4.504.5 - FORMALDEHYDE LIMITS[1]

MAXIMUM FORMALDEHYDE EMISSIONS IN PARTS PER MILLION

PRODUCT	CURRENT LIMIT
HARDWOOD PLYWOOD VENEER CORE	0.05
HARDWOOD PLYWOOD COMPOSITE CORE	0.05
PARTICLE BOARD	0.09
MEDIUM DENSITY FIBERBOARD	0.11
THIN MEDIUM DENSITY FIBERBOARD[2]	0.13

1. VALUES IN THIS TABLE ARE DERIVED FROM THOSE SPECIFIED BY THE CALIF. AIR RESOURCES BOARD, AIR TOXICS CONTROL MEASURE FOR COMPOSITE WOOD AS TESTED IN ACCORDANCE WITH ASTM E 1333. FOR ADDITIONAL INFORMATION, SEE CALIF. CODE OF REGULATIONS, TITLE 17, SECTIONS 93120 THROUGH 93120.12.

2. THIN MEDIUM DENSITY FIBERBOARD HAS A MAXIMUM THICKNESS OF 5/16" (8 MM).

DIVISION 4.5 ENVIRONMENTAL QUALITY (continued)

4.504.3 CARPET SYSTEMS. All carpet installed in the building interior shall meet the requirements of the California Department of Public Health, "Standard Method for the Testing and Evaluation of Volatile Organic Chemical Emissions from Indoor Sources Using Environmental Chambers," Version 1.2, January 2017 (Emission testing method for California Specification 01350)

See California Department of Public Health's website for certification programs and testing labs.

https://www.cdph.ca.gov/Programs/CCDPHP/DEODC/EHLB/IAQ/Pages/VOC.aspx.

4.504.3.1 Carpet cushion. All carpet cushion installed in the building interior shall meet the requirements of the California Department of Public Health, "Standard Method for the Testing and Evaluation of Volatile Organic Chemical Emissions from Indoor Sources Using Environmental Chambers," Version 1.2, January 2017 (Emission testing method for California Specification 01350)

See California Department of Public Health's website for certification programs and testing labs.

https://www.cdph.ca.gov/Programs/CCDPHP/DEODC/EHLB/IAQ/Pages/VOC.aspx.

4.504.3.2 Carpet adhesive. All carpet adhesive shall meet the requirements of Table 4.504.1.

4.504.4 RESILIENT FLOORING SYSTEMS. Where resilient flooring is installed , at least 80% of floor area receiving resilient flooring shall meet the requirements of the California Department of Public Health, "Standard Method for the Testing and Evaluation of Volatile Organic Chemical Emissions from Indoor Sources Using Environmental Chambers," Version 1.2, January 2017 (Emission testing method for California Specification 01350)

See California Department of Public Health's website for certification programs and testing labs.

hhttps://www.cdph.ca.gov/Programs/CCDPHP/DEODC/EHLB/IAQ/Pages/VOC.aspx.

4.504.5 COMPOSITE WOOD PRODUCTS. Hardwood plywood, particleboard and medium density fiberboard composite wood products used on the interior or exterior of the buildings shall meet the requirements for formaldehyde as specified in ARB's Air Toxics Control Measure for Composite Wood (17 CCR 93120 et seq.), by or before the dates specified in those sections, as shown in Table 4.504.5

4.504.5.1 Documentation. Verification of compliance with this section shall be provided as requested by the enforcing agency. Documentation shall include at least one of the following:

1. Product certifications and specifications.
2. Chain of custody certifications.
3. Product labeled and invoiced as meeting the Composite Wood Products regulation (see CCR, Title 17, Section 93120, et seq.).
4. Exterior grade products marked as meeting the PS-1 or PS-2 standards of the Engineered Wood Association, the Australian AS/NZS 2269, European 636 3S standards, and Canadian CSA 0121, CSA 0151, CSA 0153 and CSA 0325 standards.
5. Other methods acceptable to the enforcing agency.

4.505 INTERIOR MOISTURE CONTROL

4.505.1 General. Buildings shall meet or exceed the provisions of the *California Building Standards Code*.

4.505.2 CONCRETE SLAB FOUNDATIONS. Concrete slab foundations required to have a vapor retarder by California Building Code, Chapter 19, or concrete slab-on-ground floors required to have a vapor retarder by the California Residential Code, Chapter 5, shall also comply with this section.

4.505.2.1 Capillary break. A capillary break shall be installed in compliance with at least one of the following:

1. A 4-inch (101.6 mm) thick base of 1/2 inch (12.7mm) or larger clean aggregate shall be provided with a vapor barrier in direct contact with concrete and a concrete mix design, which will address bleeding, shrinkage, and curling, shall be used. For additional information, see American Concrete Institute, ACI 302.2R-06.
2. Other equivalent methods approved by the enforcing agency.
3. A slab design specified by a licensed design professional.

4.505.3 MOISTURE CONTENT OF BUILDING MATERIALS. Building materials with visible signs of water damage shall not be installed. Wall and floor framing shall not be enclosed when the framing members exceed 19 percent moisture content. Moisture content shall be verified in compliance with the following:

1. Moisture content shall be determined with either a probe-type or contact-type moisture meter.Equivalent moisture verification methods may be approved by the enforcing agency and shall satisfy requirements found in Section 101.8 of this code.
2. Moisture readings shall be taken at a point 2 feet (610 mm) to 4 feet (1219 mm) from the grade stamped end of each piece verified.
3. At least three random moisture readings shall be performed on wall and floor framing with documentation acceptable to the enforcing agency provided at the time of approval to enclose the wall and floor framing.

Insulation products which are visibly wet or have a high moisture content shall be replaced or allowed to dry prior to enclosure in wall or floor cavities. Wet-applied insulation products shall follow the manufacturers' drying recommendations prior to enclosure.

4.506 INDOOR AIR QUALITY AND EXHAUST

4.506.1 Bathroom exhaust fans. Each bathroom shall be mechanically ventilated and shall comply with the following:

1. Fans shall be ENERGY STAR compliant and be ducted to terminate outside the building.
2. Unless functioning as a component of a whole house ventilation system, fans must be controlled by a humidity control.
   a. Humidity controls shall be capable of adjustment between a relative humidity range less than or equal to 50% to a maximum of 80%. A humidity control may utilize manual or automatic means of adjustment.
   b. A humidity control may be a separate component to the exhaust fan and is not required to be integral (i.e., built-in)

Notes:

1. For the purposes of this section, a bathroom is a room which contains a bathtub, shower or tub/shower combination.
2. Lighting integral to bathroom exhaust fans shall comply with the *California Energy Code*.

4.507 ENVIRONMENTAL COMFORT

4.507.2 HEATING AND AIR-CONDITIONING SYSTEM DESIGN. Heating and air conditioning systems shall be sized, designed and have their equipment selected using the following methods:

1. The heat loss and heat gain is established according to ANSI/ACCA 2 Manual J - 2011 (Residential Load Calculation), ASHRAE handbooks or other equivalent design software or methods.
2. Duct systems are sized according to ANSI/ACCA 1 Manual D - 2014 (Residential Duct Systems), ASHRAE handbooks or other equivalent design software or methods.
3. Select heating and cooling equipment according to ANSI/ACCA 3 Manual S - 2014 (Residential Equipment Selection), or other equivalent design software or methods.

Exception: Use of alternate design temperatures necessary to ensure the system functions are acceptable.

CHAPTER 7
INSTALLER & SPECIAL INSPECTOR QUALIFICATIONS

702 QUALIFICATIONS

702.1 INSTALLER TRAINING. HVAC system installers shall be trained and certified in the proper installation of HVAC systems including ducts and equipment by a nationally or regionally recognized training or certification program. Uncertified persons may perform HVAC installations when under the direct supervision and responsibility of a person trained and certified to install HVAC systems or contractor licensed to install HVAC systems. Examples of acceptable HVAC training and certification programs include but are not limited to the following:

1. State certified apprenticeship programs.
2. Public utility training programs.
3. Training programs sponsored by trade, labor or statewide energy consulting or verification organizations.
4. Programs sponsored by manufacturing organizations.
5. Other programs acceptable to the enforcing agency.

702.2 SPECIAL INSPECTION [HCD]. When required by the enforcing agency, the owner or the responsible entity acting as the owner's agent shall employ one or more special inspectors to provide inspection or other duties necessary to substantiate compliance with this code. Special inspectors shall demonstrate competence to the satisfaction of the enforcing agency for the particular type of inspection or task to be performed. In addition to other certifications or qualifications acceptable to the enforcing agency, the following certifications or education may be considered by the enforcing agency when evaluating the qualifications of a special inspector:

1. Certification by a national or regional green building program or standard publisher.
2. Certification by a statewide energy consulting or verification organization, such as HERS raters, building performance contractors, and home energy auditors.
3. Successful completion of a third party apprentice training program in the appropriate trade.
4. Other programs acceptable to the enforcing agency.

Notes:

1. Special inspectors shall be independent entities with no financial interest in the materials or the project they are inspecting for compliance with this code.
2. HERS raters are special inspectors certified by the California Energy Commission (CEC) to rate homes in California according to the Home Energy Rating System (HERS).

[BSC] When required by the enforcing agency, the owner or the responsible entity acting as the owner's agent shall employ one or more special inspectors to provide inspection or other duties necessary to substantiate compliance with this code. Special inspectors shall demonstrate competence to the satisfaction of the enforcing agency for the particular type of inspection or task to be performed. In addition, the special inspector shall have a certification from a recognized state, national or international association, as determined by the local agency. The area of certification shall be closely related to the primary job function, as determined by the local agency.

Note: Special inspectors shall be independent entities with no financial interest in the materials or the project they are inspecting for compliance with this code.

703 VERIFICATIONS

703.1 DOCUMENTATION. Documentation used to show compliance with this code shall include but is not limited to, construction documents, plans, specifications, builder or installer certification, inspection reports, or other methods acceptable to the enforcing agency which demonstrate substantial conformance. When specific documentation or special inspection is necessary to verify compliance, that method of compliance will be specified in the appropriate section or identified applicable checklist.

That ADU Guy LLC
THATADUGUY.COM
Designer signature,
C P Dharmasenage

NEW ACCESSORY DWELLING UNIT

REVISIONS

No.	Description	Date

CAL GREEN-2

Project number	N/A
Date	05/24/26
Drawn by	C P DHARMASENAGE
Checked by	Checker

A-0.2

Scale

11/15/2026 10:44:19 AM

DISCLAIMER: *THIS DOCUMENT IS PROVIDED AND INTENDED TO BE USED AS A MEANS TO INDICATE AREAS OF COMPLIANCE WITH THE CALIFORNIA GREEN BUILDING STANDARDS (CALGREEN) CODE. DUE TO THE VARIABLES BETWEEN BUILDING DEPARTMENT JURISDICTIONS, THIS CHECKLIST IS TO BE USED ON AN INDIVIDUAL PROJECT BASIS AND MAY BE MODIFIED BY THE END USER TO MEET THOSE INDIVIDUAL NEEDS. THE END USER ASSUMES ALL RESPONSIBILITY ASSOCIATED WITH THE USE OF THIS DOCUMENT, INCLUDING VERIFICATION WITH THE FULL CODE.*

2025 Single-Family Residential Mandatory Requirements Summary

NOTE: Single-family residential buildings subject to the Energy Code must comply with all applicable mandatory measures, regardless of the compliance approach used. Review the respective sections for more information.

Space Conditioning, Water Heating, and Plumbing System:

§ 110.0-110.3:	**Certification.** Heating, ventilation, and air conditioning (HVAC) equipment, water heaters, and all other regulated appliances must be certified by the manufacturer to the California Energy Commission.
§ 110.2(a):	**HVAC Efficiency.** Equipment must meet the applicable efficiency requirements in Tables 110.2-A through -L. *
§ 110.2(b):	**Controls for Heat Pumps with Supplementary Heaters.** Heat pumps with supplementary heaters must have control requirements as specified in § 150.0(h)7 and § 150.0)i2. *
§ 110.2(c):	**Thermostats.** All heating or cooling systems not controlled by a central energy management control system (EMCS) must have a setback thermostat. *
§ 110.3(c)3:	**Insulation.** Unfired service water heater storage tanks and solar water-heating backup tanks must have adequate insulation, or tank surface heat loss rating.
§ 110.3(c)6:	**Isolation Valves.** Instantaneous water heaters with an input rating greater than 6.8 kBtu per hour (2 kW) must have isolation valves with hose bibbs or other fittings on both cold and hot water lines to allow for flushing the water heater when the valves are closed.
§110.3(c)7:	**Backup Heat and Ventilation.** Air-source heat pump water heaters must have backup heat (internal or external) if inlet air is unconditioned, unless compressor cut-off temperature is below Heating Winter Median of Extremes from Reference Appendix JA2. Heat pump water heater installation space and/or communicating space(s) must meet minimum volume, ducting, and/or grille net free area by kBtu/h of compressor capacity.
§ 110.5:	**Pilot Lights.** Continuously burning pilot lights are prohibited for natural gas: fan-type central furnaces; household cooking appliances (except appliances without electrical supply voltage connection with pilot lights that consume less than 150 Btu/h); pool and spa heaters. *
§ 150.0(h)1:	**Building Cooling and Heating Loads.** Heating and/or cooling loads are calculated in accordance with the ASHRAE Handbook, Equipment Volume, Applications Volume, and Fundamentals Volume; the SMACNA Residential Comfort System Installation Standards Manual; or the ACCA Manual J using design conditions specified in § 150.0(h)2. *
§ 150.0(h)3A:	**Clearances.** Air conditioner and heat pump outdoor condensing units must have a clearance of at least five feet from any dryer outlet or vent.
§ 150.0(h)3B:	**Liquid Line Drier.** Air conditioners and heat pump systems must be equipped with liquid line filter driers if required, as specified by the manufacturer's instructions.
§ 150.0(h)5:	**System Selection.** Equipment sizing and selection must meet the cooling and heating loads of § 150.0(h)1 & 2, and systems must be sized per ACCA Manual S-2023 with no minimum cooling capacity. Furnace heating capacity must meet ACCA Manual S. Heat pump heating capacity must meet minimum CBC requirements without including supplementary heat with no limit on maximum heating capacity.
§ 150.0(h)6:	**Defrost.** Installer-adjustable defrost delay timers must be set to greater than or equal to 90 minutes. CF2R certification required. *
§ 150.0(h)7:	**Supplementary Heating Control Configuration:** Heat pumps with supplementary heating must have controls to lock supplementary heating above outside air temperature no greater than 35°F, allowed during defrost or emergency operation. CF2R certification required. *
§ 150.0(h)8:	**Sizing of Electric Resistance Supplementary Heat:** When heat pumps have electric resistance heat, the capacity of electric resistance heat must not exceed the heat pump nominal cooling capacity (at 95°F ambient conditions) multiplied by 2.7 kW per ton, rounded up to the closest kW.
§ 150.0(h)9:	**Capacity Variation with Third-party Thermostats:** For variable or multi-speed systems, the space conditioning system and thermostat must be capable of responding to heating and cooling loads by modulating system compressor speed and must meet thermostat requirements of § 150.0)i2. CF2R certification required.
§ 150.0(i):	**Thermostat.** All heating or cooling systems including heat pumps which are not controlled by energy management control system (EMCS) must have setback thermostat. Additional requirements for thermostats that control heat pumps with supplemental heating include thermostat must display outdoor air temperature, must lock out supplementary heat when outdoor air temperature is above 35°F, and must notify when supplemental heat is in use.*
§ 150.0)j1:	**Water Piping, Solar Water-heating System Piping, and Space Conditioning System Line Insulation.** All domestic hot water piping must be insulated as specified in § 609.12 of the California Plumbing Code. *
§ 150.0)j2:	**Insulation Protection.** Piping insulation must be protected from damage, including from sunlight, moisture, equipment maintenance, and wind, as required by §120.3(b). Insulation exposed to weather must be water retardant and protected from UV light (no adhesive tapes). Insulation covering chilled water piping and refrigerant suction piping located outside the conditioned space must include, or be protected by, a Class I or II vapor retarder. Pipe insulation buried below grade must be installed in a waterproof and non-crushable casing or sleeve.
§ 150.0(n)1:	**Gas or Propane Water Heating Systems.** Systems using gas or propane water heaters to serve individual dwelling units must designate a space at least 2.5' x 2.5' x 7' suitable for the future installation of a heat pump water heater, and meet electrical and plumbing requirements, based on the distance between this designated space and the water heater location; and a condensate drain no more than 2" higher than the base of the water heater
§ 150.0(n)2:	**Solar Water Heating Systems.** Solar water heating systems and collectors must be certified and rated by the Solar Rating and Certification Corporation (SRCC), the International Association of Plumbing and Mechanical Officials, Research and Testing (IAPMO R&T), or by a listing agency that is approved by the Executive Director.

Ducts and Fans

§110.8(d)3:	**Ducts.** Insulation installed on an existing space-conditioning duct must comply with § 604.0 of the California Mechanical Code (CMC). If a contractor installs the insulation, the contractor must certify to the customer, in writing, that the insulation meets this requirement.
§ 150.0(m)1:	**CMC Compliance.** All air-distribution system ducts and plenums must meet CMC §§ 601.0-605.0 and ANSI/SMACNA-006-2006 HVAC Duct Construction Standards Metal and Flexible 3rd Edition. Portions of supply- and return-air ducts and plenums must be insulated to R-6.0 or higher. Ducts located entirely in conditioned space as confirmed via field verification and diagnostic testing (RA3.1.4.3.8) do not require insulation; in dwelling units with attics, the ducts must be below the ceiling separating occupiable space from the attic. Connections of metal ducts and inner core of flexible ducts must be mechanically fastened. Openings must be sealed with mastic, tape, or other duct-closure system that meets applicable UL requirements; or aerosol sealant that meets UL 723. The combination of mastic and either mesh or tape must be used to seal openings greater than ¼", if mastic or tape is used. Building cavities, air handler support

2025 Single-Family Residential Mandatory Requirements Summary

	platforms, and plenums designed or constructed with materials other than sealed sheet metal, duct board or flexible duct must not be used to convey conditioned air. Building cavities and support platforms may contain ducts; ducts installed in these spaces must not be compressed. *
§ 150.0(m)2:	**Factory-Fabricated Duct Systems** must comply with applicable requirements of UL 181 for duct construction, connections, and closures; joints and seams of duct systems and their components must not be sealed with cloth back rubber adhesive duct tapes unless such tape is used in combination with mastic and draw bands.
§ 150.0(m)3:	**Field-Fabricated Duct Systems** must comply with applicable requirements for: pressure-sensitive tapes, mastics, sealants, and other requirements specified for duct construction.
§ 150.0(m)7:	**Backdraft Damper.** Fan systems that exchange air between conditioned space and outdoors must have backdraft or automatic dampers.
§ 150.0(m)8:	**Gravity Ventilation Dampers.** Gravity ventilating systems serving conditioned space must have either automatic or readily accessible, manually operated dampers in all openings to the outside, except combustion inlet and outlet air openings and elevator shaft vents.
§ 150.0(m)9:	**Protection of Insulation.** Insulation must be protected from damage due to sunlight, moisture, equipment maintenance, and wind. Insulation exposed to weather must be suitable for outdoor service (e.g., protected by aluminum, sheet metal, painted canvas, or plastic cover). Cellular foam insulation must be protected as above or painted with a water retardant and solar radiation-resistant coating.
§ 150.0(m)10:	**Porous Inner Core Flex Duct.** Flex ducts with porous inner cores must have a non-porous layer or air barrier between the inner core and outer vapor barrier.
§ 150.0(m)11:	**Duct System Sealing and Leakage Test.** When space conditioning systems use forced air duct systems to supply conditioned air to an occupiable space, the ducts must be sealed and duct leakage tested, as confirmed through field verification and diagnostic testing, in accordance with Reference Residential Appendix RA3.1.
§ 150.0(m)12:	**Air Filtration.** Space conditioning systems with ducts exceeding 10 feet and the supply side of ventilation systems must have MERV 13 or equivalent filters. Filters for space conditioning systems must have a two inch depth, or can be one inch if sized per Equation 150.0-A. Clean-filter pressure drop and labeling must meet the requirements in §150.0(m)12. Filters must be accessible for regular service. Filter racks or grilles must use gaskets, sealing, or other means to close gaps around the inserted filters and prevents air from bypassing the filter. *
§ 150.0(m)13:	**Space Conditioning System Airflow Rate and Fan Efficacy.** Space conditioning systems that use ducts to supply cooling must have a hole for the placement of a static pressure probe, or a permanently installed static pressure probe in the supply plenum. Airflow must be ≥ 350 CFM per ton of nominal cooling capacity, and an air-handling unit fan efficacy ≤ 0.45 watts per CFM for gas furnace air handlers and ≤ 0.58 watts per CFM for all others. Small duct high velocity systems must provide an airflow ≥ 250 CFM per ton of nominal cooling capacity, and an air-handling unit fan efficacy ≤ 0.62 watts per CFM. Field verification testing is required in accordance with Reference Residential Appendix RA3.3. *

Ventilation and Indoor Air Quality:

§ 150.0(o)1:	**Requirements for Ventilation and Indoor Air Quality.** All dwelling units shall meet the requirements of ASHRAE Standard 62.2, Ventilation and Acceptable Indoor Air Quality in Residential Buildings subject to the amendments specified in §150.0(o)1. *
§ 150.0(o)1B:	**Central Fan Integrated (CFI) Ventilation Systems.** Continuous operation of CFI air handlers used in CFI systems is not a permissible method to provide whole-dwelling unit ventilation airflow required per §150.0(o)1C. A motorized damper(s) shall be installed on the ventilation duct(s) that prevents all airflow through the space conditioning duct system when the damper(s) is closed and controlled per §150.0(o)1Biiiiiiv. CFI ventilation systems must have controls that track outdoor air ventilation run time, and either open or close the motorized damper(s) for compliance with §150.0(o)1C.
§ 150.0(o)1C:	**Whole-Dwelling Unit Mechanical Ventilation for Single-Family dwellings.** Single-family dwellings shall have mechanical ventilation specified in §150.0(o)1Ci and 150.0(o)1Cii.Single family detached dwelling units and attached dwelling units not sharing ceilings or floors with other dwelling units, occupiable spaces, public garages, or commercial spaces may reduce their required mechanical ventilation rates in accordance with §150.0(o)1Ciii-iii.* Vertically attached dwelling units shall not reduce their minimum ventilation rates in accordance with §150.0(o)1Ciii-iii.
§ 150.0(o)1G:	**Local Mechanical Exhaust.** Kitchens and bathrooms shall have local mechanical exhaust; nonenclosed kitchens shall have demand-controlled exhaust system meeting requirements of §150.0(o)1Giii, enclosed kitchens and bathrooms shall either use demand-controlled as specified in §150.0(o)1Giii or continuous exhaust as specified in §150.0(o)1Giv. Airflow shall be measured by the installer per §150.0(o)1Gv, and rated for sound per §150.0(o)1Gvi. *
§ 150.0(o)1H-J:	**Airflow Measurement, Sound Ratings, Label of Whole-Dwelling Unit Ventilation Systems.** The airflow required per §150.0(o)1C shall be measured by using a flow hood, flow grid, or other airflow measuring device at the fan's inlet or outlet terminals/grilles per Reference Residential Appendix RA3.7. Whole-Dwelling unit ventilation systems shall be rated for sound per ASHRAE 62.2 §7.3 at no less than the minimum airflow rate required by §150.0(o)1C. Manual on-off switches must be labeled per §150.0(o)1J.
§ 150.0(o)2:	**Field Verification and Diagnostic Testing.** Whole-Dwelling Unit ventilation airflow, vented range hood airflow and sound rating, and HRV and ERV fan efficacy shall be verified in accordance with Reference Residential Appendix RA3.7. Vented range hoods shall be verified per Reference Residential Appendix RA3.7.4.3 to confirm if it is rated by HVI or AHAM to comply with the airflow rates and sound requirements per §150.0(o)1G

Electric and Battery Energy Storage Ready:

§ 150.0(s):	**Battery Energy Storage System (BESS) Ready.** All single-family residences that include one or two dwelling units, which a load serving entity provides with electrical service for the dwelling unit that is greater than 125 amps, shall meet at least one of the following: Either BESS-ready interconnection equipment with backed up capacity of 60 amps or more and four or more BESS supplied branch circuits in §150.0(s)2. or a dedicated raceway from the main service to a subpanel that supplies the branch circuits in § 150.0(s)2; at least four branch circuits must be identified and have their source collocated at a single panelboard suitable to be supplied by the BESS,

2025 Single-Family Residential Mandatory Requirements Summary

	with one circuit supplying the refrigerator, one lighting circuit near the primary exit, and one circuit supplying a sleeping room receptacle outlet; main panelboard must have a minimum busbar rating of 225 amps; sufficient space must be reserved to allow future installation of a system isolation equipment/transfer switch within 3 feet of the main panelboard, with raceways installed between the panelboard and the switch location to allow the connection of backup power source. *
§ 150.0(t):	**Heat Pump Space Heater Ready.** Systems using gas or propane furnaces to serve individual dwelling units must include: A dedicated unobstructed 240V branch circuit wiring installed within 3' of the furnace with circuit conductors rated at least 30 amps with the blank cover identified as "240V ready;" and a reserved main electrical service panel space to allow for the installation of a double pole circuit breaker permanently marked as "For Future 240V use."
§ 150.0(u):	**Electric Cooktop Ready.** Systems using gas or propane cooktop to serve individual dwelling units must include: A dedicated unobstructed 240V branch circuit wiring installed within 3' of the cooktop with circuit conductors rated at least 50 amps with the blank cover identified as "240V ready;" and a reserved main electrical service panel space to allow for the installation of a double pole circuit breaker permanently marked as "For Future 240V use."
§ 150.0(v):	**Electric Clothes Dryer Ready.** Clothes dryer locations with gas or propane plumbing to serve individual dwelling units must include: A dedicated unobstructed 240V branch circuit wiring installed within 3' of the dryer location with circuit conductors rated at least 30 amps with the blank cover identified as "240V ready;" and a reserved main electrical service panel space to allow for the installation of a double pole circuit breaker permanently marked as "For Future 240V use."

Lighting:

§ 110.9:	**Lighting Controls and Components.** All lighting control devices and systems, light sources, and luminaires must meet the applicable requirements of §110.9. *
§ 150.0(k)1A:	**Luminaire Efficacy.** All installed luminaires and light sources must meet the requirements of Reference Joint Appendix JA8, except lighting integral to exhaust fans, kitchen range hoods, bath vanity mirrors, and garage door openers; navigation lighting less than 5 watts; lighting internal to drawers, cabinets, and linen closets with an efficacy of at least 45 lumens per watt; and ceiling fan kits subject to DOE's Appliance and Equipment Standards. *
§ 150.0(k)1C:	**Recessed Downlight Luminaires in Ceilings.** Luminaires recessed into ceilings must not contain screw-based sockets, be airtight with air leakage rate < 2.0 cfm at 75 Pascals, and leak paths be sealed with a gasket or caulk. California Electrical Code Article 410.116 must also be met. *
§ 150.0(k)1D:	**Light Sources in Enclosed or Recessed Luminaires.** Lamps and other separable light sources installed in enclosed or recessed luminaires must meet the JA8 elevated temperature requirements, including marking requirements.
§ 150.0(k)1E:	**Blank Electrical Boxes.** The number of electrical boxes that are more than five feet above the finished floor and do not contain a luminaire or other device shall be no more than the number of bedrooms. These boxes must be served by a dimmer, vacancy sensor control, low voltage wiring, or fan speed control.
§ 150.0(k)2A:	**Indoor Lighting Controls.** Lighting must have readily accessible wall-mounted controls that allow the lighting to be manually turned on and off.
§ 150.0(k)2D:	**Controls Permitted.** An energy management control system (EMCS) may be used to comply with dimming, occupancy, and control requirements if it provides the functionality of the specified control per §110.9 and the physical controls specified in §150.0(k)2A. Controls must not bypass a dimmer, occupant sensor, or vacancy sensor function installed to comply with §150.0(k)2.
§ 150.0(k)2E:	**Automatic Shutoff Controls.** In bathrooms, garages, laundry rooms, utility rooms and walk-in closets, at least one installed luminaire must be controlled by an occupancy or vacancy sensor providing automatic-off functionality. Lighting inside drawers and cabinets with opaque fronts or doors must have controls that turn the light off when the drawer or door is closed.
§ 150.0(k)2F:	**Dimmers.** Lighting in habitable spaces (e.g., living rooms, dining rooms, kitchens, bedrooms) must have readily accessible wall-mounted dimming controls that allow the lighting to be manually adjusted up and down, except lighting integral to kitchen range hoods and bathroom exhaust fans, navigation lighting less than 5 watts, lighting internal to drawers, cabinetry with opaque fronts or doors and controlled by automatic-off controls, luminaires in a circuit with controlled lighting power less than 20 watts or controlled by an occupancy or vacancy sensor. Forward phase cut dimmers controlling LED light sources in these spaces must comply with NEMA SSL 7A. Lighting integrated with ceiling fan may be controlled via a remote control.
§ 150.0(k)2G:	**Independent Controls.** Lighting integral to exhaust fans shall be controlled independently from the fans. Lighting under cabinets or shelves, lighting in display cabinets, and switched outlets must be controlled separately from ceiling-installed lighting.
§ 150.0(k)3:	**Residential Outdoor Lighting.** Outdoor lighting permanently mounted to a single-family residential building or other buildings on the same lot must meet luminaire efficacy requirements of §150.0(k)1A, have a manual on/off switch and either a photocell and motion sensor, a photocell and automatic time switch, or an astronomical time clock. Controls that override to ON are not allowed, unless that override automatically returns the automatic control to its normal operation within 6 hours. An EMCS or other controls that provides the specified control functionality may be used but must meet all applicable requirements.
§ 150.0(k)4:	**Internally Illuminated Address Signs** must either comply with §140.8 or consume no more than 5 watts of power.
§ 150.0(k)5:	**Residential Garages for Eight or More Vehicles.** Lighting for residential parking garages for eight or more vehicles must comply with the applicable requirements for nonresidential garages in §§ 110.9, 130.0, 130.1, 130.4, 140.6, and 141.0.

2025 Single-Family Residential Mandatory Requirements Summary

Building Envelope:

§ 110.6(a)1:	**Air Leakage.** Manufactured fenestration, exterior doors, and exterior pet doors must limit air leakage to 0.3 CFM per square foot or less when tested per NFRC-400, ASTM E283, or AAMA/WDMA/CSA 101/I.S.2/A440-2011. *
§110.6(a)2-4:	**U-factor, Solar heat gain coefficient, Visible transmittance.** The fenestration product and exterior door's U-factor and solar heat gain coefficient (SHGC) shall be rated in accordance with NFRC 100 and NFRC 200, or use the applicable defaults in Table 110.6-A and TABLE 110.6-B. The visible transmittance (VT) shall be rated in accordance with NFRC 200 or ASTM E972, for tubular daylighting devices VT shall be rated using NFRC 203. *
§ 110.6(a)5:	**Labeling.** Fenestration products and exterior doors must have a label meeting the requirements of §10-111(a).
§ 110.6(b):	**Field-fabricated Exterior Doors and Fenestration** products must use U-factors from Table 110.6-A and solar heat gain coefficient (SHGC) values from Table 110.6-B. Must be caulked and/or weather-stripped. *
§ 110.7:	**Air Leakage.** All joints, penetrations, and other openings in the building envelope that are potential sources of air leakage must be caulked, gasketed, or weather-stripped.
§ 110.8(a):	**Insulation Certification by Manufacturers.** Insulation must be certified by the Department of Consumer Affairs, Bureau of Household Goods and Services (BHGS).
§ 110.8(g):	**Insulation Requirements for Heated Slab Floors.** Heated slab floors must be insulated per the requirements of §110.8(g).
§ 110.8(i):	**Roofing Products Solar Reflectance and Thermal Emittance.** The thermal emittance and aged solar reflectance values of the roofing material must meet the requirements of § 110.8(i) and be labeled per §10-113 when the installation of a cool roof is specified on the CF1R.
§ 110.8(j):	**Radiant Barrier.** When required, radiant barriers must have an emittance of 0.05 or less and be certified to the Department of Consumer Affairs.
§ 150.0(a):	**Roof Deck, Ceiling, and Rafter Roof Insulation.** Roof decks in newly constructed attics above conditioned space in climate zones 4 and 8-16 area-weighted average U-factor not exceeding U-0.184. Ceiling and rafter roofs minimum R-22 insulation in wood-frame ceiling; or area-weighted average U-factor must not exceed 0.043. Rafter roof alterations minimum R-19 or area-weighted average U-factor of 0.054 or less. Attic access doors must have permanently attached insulation using adhesive or mechanical fasteners. The attic access must be gasketed to prevent air leakage. Insulation must be installed in direct contact with a roof or ceiling that is sealed to limit infiltration and exfiltration as specified in §110.7, including but not limited to placing insulation either above or below the roof deck or on top of a drywall ceiling. *
§ 150.0(b):	**Loose-fill Insulation.** Loose fill insulation must meet the manufacturer's required density for the labeled R-value.
§ 150.0(c):	**Wall Insulation.** Minimum R-15 insulation in 2x4 inch wood framing wall or have a U-factor of 0.095 or less, or R-21 in 2x6 inch wood framing or have a U-factor of 0.069 or less, Opaque non-framed assemblies must have an overall assembly U-factor not exceeding 0.102. Masonry walls must meet Tables 150.1-A. *
§ 150.0(d):	**Raised-floor Insulation.** Minimum R-19 insulation in wood framed raised-floor or 0.037 maximum U-factor. *
§ 150.0(f):	**Slab Edge Insulation.** Slab edge insulation must meet the following: water absorption rate no greater than 0.3 percent for insulation material alone without facings; water vapor permeance no greater than 2.0 perm per inch; protected from physical damage and UV light deterioration; and, when installed as part of a heated slab floor, meet the requirements of §110.8(g).
§ 150.0(g)1:	**Vapor Retarder.** In climate zones 1 through 16, the earth floor of unvented crawl space must be covered with a Class I or Class II vapor retarder. This requirement also applies to controlled ventilation crawl space for buildings complying with the exception to §150.0(d).
§ 150.0(g)2:	**Vapor Retarder.** In climate zones 14 and 16, a Class I or Class II vapor retarder must be installed on the conditioned space side of all insulation in all exterior walls, vented attics, and unvented attics with air-permeable insulation.
§ 150.0(q):	**Fenestration Products.** Fenestration, including skylights, separating conditioned space from unconditioned space or outdoors must have a maximum area-weighted average U-factor of 0.40. *

Solar Readiness:

§ 110.10(a)1:	**Single-family Residences.** Single-family residences located in subdivisions with 10 or more single-family residences and where the application for a tentative subdivision map for the residences has been deemed complete and approved by the enforcement agency, which do not have a photovoltaic system installed, must comply with the requirements of §110.10(b)-(e).
§110.10(b)1A:	**Minimum Solar Zone Area.** The solar zone must comply with access, pathway, smoke ventilation, and spacing requirements per Title 24, Part 9, or other parts of Title 24, or any requirements adopted by a local jurisdiction. The solar zone must be located on the roof or overhang of the building and have a total area no less than 250 square feet. The solar zone total area must be comprised of areas with no dimension less than 5 feet and no less than 80 square feet each for buildings with roof areas up to 10,000 square feet; or no less than 160 square feet each for buildings with roof areas greater than 10,000 square feet. *
§ 110.10(b)2:	**Azimuth.** All sections of the solar zone located on steep-sloped roofs must have an azimuth between 90-300° of true north.
§ 110.10(b)3A:	**Shading.** No obstructions in solar zone, including but not limited to: vents, chimneys, architectural features, and roof mounted equipment. *
§ 110.10(b)3B:	**Shading.** Any obstruction located on the roof or any other part of the building that projects above a solar zone must be located at least twice the horizontal distance of the height difference between the highest point of the obstruction and the horizontal projection of the nearest point of the solar zone, measured in the vertical plane. *
§ 110.10(b)4:	**Structural Design Loads on Construction Documents.** For areas of the roof designated as a solar zone, the structural design loads for roof dead load and roof live load must be clearly indicated on the construction documents.
§ 110.10(c):	**Interconnection Pathways.** The construction documents must indicate: a location reserved for inverters and metering equipment and a pathway reserved for routing of conduit from the solar zone to the point of interconnection with the electrical service; and for single-family residences and central water-heating systems, a pathway reserved for routing plumbing from the solar zone to the water-heating system.

2025 Single-Family Residential Mandatory Requirements Summary

§ 110.10(d):	**Documentation.** A copy of the construction documents or a comparable document indicating the information from §110.10(b)-(c) must be provided to the occupant.
§ 110.10(e)1:	**Main Electrical Service Panel.** The main electrical service panel must have a minimum busbar rating of 200 amps.
§ 110.10(e)2:	**Main Electrical Service Panel.** The main electrical service panel must have a reserved space to allow for the installation of a double pole circuit breaker for a future solar electric installation. The reserved space must be permanently marked as "For Future Solar Electric."

Fireplaces, Decorative Gas Appliances, and Gas Log:

§ 110.5(e):	**Pilot Light.** Continuously burning pilot lights are not allowed for indoor and outdoor fireplaces.
§ 150.0(e)1:	**Closable Doors.** Masonry or factory-built fireplaces must have a closable metal or glass door covering the entire opening of the firebox.
§ 150.0(e)2:	**Combustion Intake.** Masonry or factory-built fireplaces must have a combustion outside air intake, which is at least six square inches in area and is equipped with a readily accessible, operable, and tight-fitting damper or combustion-air control device.
§ 150.0(e)3:	**Flue Damper.** Masonry or factory-built fireplaces must have a flue damper with a readily accessible control. *

Pool and Spa Systems and Equipment:

§ 110.4(a):	**Certification by Manufacturers.** Pool/spa heating equipment must be certified as compliant with Appliance Efficiency Regulations; have an externally mounted, readily accessible on-off switch that allows shutting off the heater without adjusting the thermostat; permanent, easily readable weatherproof plate or card with energy efficiency rating and operating instructions.
§ 110.4(b)1:	**Heating Equipment.** Pool/spa heating equipment must meet applicable standards, by fuel type.
§ 110.4(b)2:	**Piping.** At least 18 inches of horizontal or vertical pipe installed between the filter and the heater; or dedicated suction and return lines; or built-in or built-up connections installed to allow for the future addition of solar heating equipment.
§ 110.4(b)3:	**Covers.** Outdoor pools or spas with electric or gas heater must have a cover.
§ 110.4(b)4:	**Directional Inlets and Time Switches for Pools.** Pools must have directional inlets that adequately mix the pool water, and a permanently installed time switch that will allow all pumps to be set or programmed to run only during off-peak electric demand periods.
§ 110.4(c):	**Heat Source Sizing.** Pool/spa heating systems must be solar heating system with collector area of at least 60% of pool/spa surface area; heat pump sized per JA16.3; combination of solar and heat pump; or use 60% or more on-site renewable/recoverable energy. *
§ 110.4(d):	**Heat Pump Pool Heaters with Supplementary Heating.** Controls for such systems must limit supplementary heating when the heating load can be met by the heat pump alone.
§ 110.5:	**Pilot Light.** Natural gas pool and spa heaters must not have a continuously burning pilot light.
§ 150.0(p):	**Pool Systems and Equipment Installation.** Single-family pool systems or equipment must meet the specified requirements for pump sizing, flow rate, piping, filters, and valves.

*Exceptions may apply.

That ADU Guy LLC

THATADUGUY.COM

Designer signature,

C P Dharmasenage

NEW ACCESSORY DWELLING UNIT

REVISIONS

No.	Description	Date

SINGLE FAMILY MANDATORY REQUIREMENTS

Project number	N/A
Date	05/24/26
Drawn by	C P DHARMASENAGE
Checked by	Checker

EN-01

Scale

11/15/2026 10:44:21 AM

That ADU Guy LLC

THATADUGUY.COM

NEW ACCESSORY DWELLING UNIT

REVISIONS

No.	Description	Date

SITE PLAN

Project number	N/A
Date	05/24/26
Drawn by	Author
Checked by	Checker

A-0.4

Scale

11/15/2026 10:44:21 AM

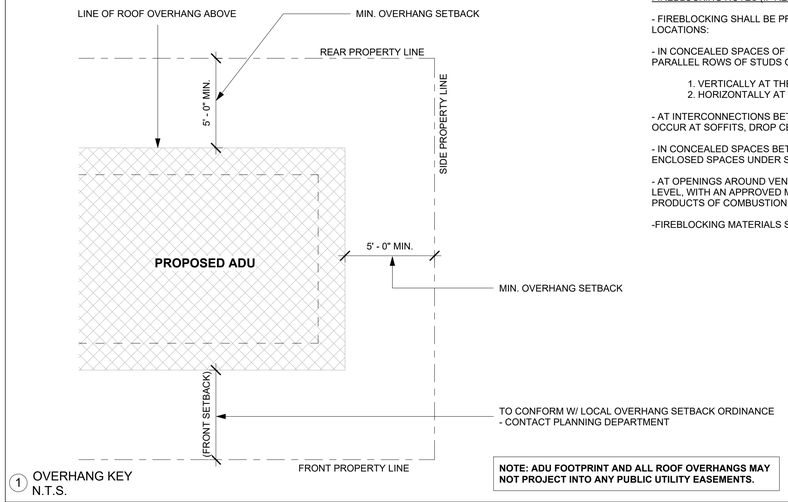

1 OVERHANG KEY
N.T.S.

NOTE: ADU FOOTPRINT AND ALL ROOF OVERHANGS MAY NOT PROJECT INTO ANY PUBLIC UTILITY EASEMENTS.

FIREBLOCKING NOTES (IF REQUIRED):

- FIREBLOCKING SHALL BE PROVIDED IN WOOD-FRAMED CONSTRUCTION IN THE FOLLOWING LOCATIONS:

- IN CONCEALED SPACES OF STUD WALLS AND PARTITIONS, INCLUDING FURRED SPACES AND PARALLEL ROWS OF STUDS OR STAGGERED STUDS, AS FOLLOWS:

1. VERTICALLY AT THE CEILING AND FLOOR LEVELS.
2. HORIZONTALLY AT INTERVALS NOT EXCEEDING 10 FEET (3048 MM).

- AT INTERCONNECTIONS BETWEEN CONCEALED VERTICAL AND HORIZONTAL SPACES SUCH AS OCCUR AT SOFFITS, DROP CEILINGS AND COVE CEILINGS.

- IN CONCEALED SPACES BETWEEN STAIR STRINGERS AT THE TOP AND BOTTOM OF THE RUN. ENCLOSED SPACES UNDER STAIRS SHALL COMPLY WITH SECTION R302.7.

- AT OPENINGS AROUND VENTS, PIPES, DUCTS, CABLES AND WIRES AT CEILING AND FLOOR LEVEL, WITH AN APPROVED MATERIAL TO RESIST THE FREE PASSAGE OF FLAME AND PRODUCTS OF COMBUSTION.

-FIREBLOCKING MATERIALS SHALL COMPLY WITH R302.11.1

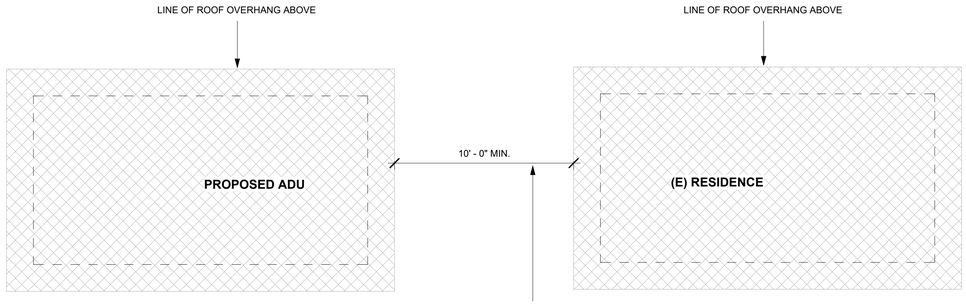

CRC2025 TABLE 302.1(1)

2 NON SPRINKLERED STRUCTURE
SEPERATION KEY
N.T.S.

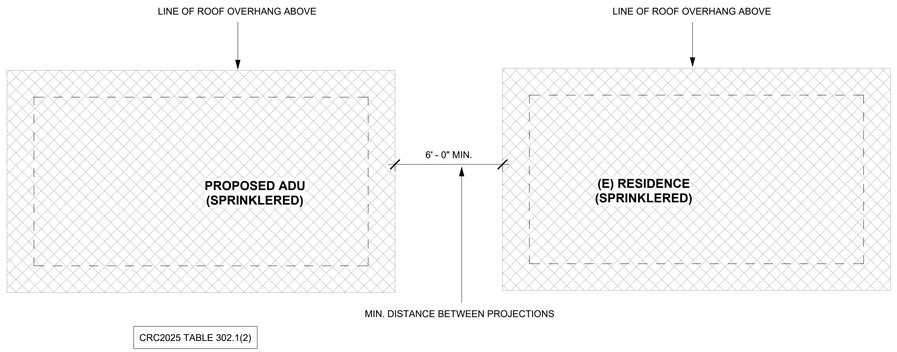

CRC2025 TABLE 302.1(2)

3 SPRINKLERED STRUCTURE
SEPERATION KEY
N.T.S.

That ADU Guy LLC

THATADUGUY.COM

Designer signature,
C P Dharmasenage

NEW ACCESSORY DWELLING UNIT

REVISIONS

No.	Description	Date

SETBACK & FIRE DETAILS

Project number	N/A
Date	05/24/26
Drawn by	C P DHARMASENAGE
Checked by	Checker

A-1.0

Scale N.T.S.

11/15/2026 10:44:21 AM

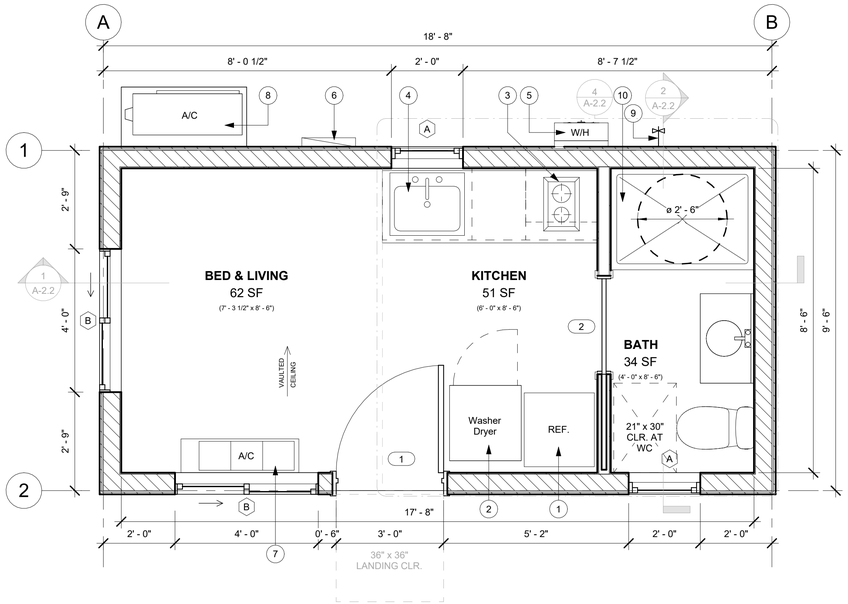

1 FLOOR PLAN
1/2" = 1'-0"

PROPOSED FLOOR PLAN NOTES	
Note #	Note Text
1	24" REFRIGERATOR
2	24" WASHER DRYER COMBO
3	12" ELEC. COOKTOP W/ EXHAUST HOOD ABOVE (280 CFM), VENT TO EXTERIOR PER CODE
4	25" SINK
5	240-VOLT 8-KW 1.95-GPM TANKLESS ELECTRIC WATER HEATER, RHEEM PROFESSIONAL CLASSIC, MODEL #RTEX-08
6	100A ELECTRICAL SUBPANEL
7	MINI-SPLIT AIR HANDLER
8	6,000 BTU, 25.5 SEER2, MINI SPLIT HEAT PUMP - DUCTLESS INVERTER SYSTEM ON CONC. MAINTENANCE PAD. Senville AURA Series, MODEL #SENA-06HF-16
9	WATER SHUTTOFF VALVE FOR ADU AND HOSE BIBB
10	48" x 34" SHOWER W/ 72" HIGH SHOWER WALL, (4/ A-2.2) SHOWER STALL SHALL HAVE A MINIMUM FINISHED INTERIOR OF 1024 SQ. IN. AND ENCOMPASS A 30" DIAMETER CIRCLE PER CPC 408.6. FINISHED AREA SHALL BE MAINTAINED TO A HEIGHT OF 70" ABOVE DRAIN.

WALL LEGEND	
	NEW INTERIOR WALLS: 2x4 STUD WALL W/ 1/2" GYP BD EA SIDE
	NEW EXTERIOR WALLS: 2x6 STUD WALL (INSULATION PER TITLE 24) SEE EXTERIOR ELEVATIONS FOR FINISHES

DOOR SCHEDULE						
Type Mark	Width	Height	Operation	Count	GLAZED - U-FACTOR	GLAZED-SHGC
1	3' - 0"	6' - 8"	SWING	1	0.27	0.23
2	2' - 8"	6' - 8"	POCKET	1		

WINDOW SCHEDULE						
Type Mark	Width	Height	Operation	Count	U-FACTOR	SHGC
A	2' - 0"	3' - 0"	SINGLE-HUNG	2	0.25	0.21
B	4' - 0"	4' - 0"	SLIDING	2	0.25	0.21

EXTERIOR DOOR NOTES:

-ENTRY DOOR GLAZING TO BE TEMPERED GLASS

- ENTRY/EXIT DOOR MUST OPEN OVER A LANDING NOT MORE THAN 1.5" BELOW THE THRESHOLD (CRC311.3.1)

- THERE SHALL BE A LANDING OR FLOOR ON EACH SIDE OF EACH EXTERIOR DOOR. THE WIDTH OF EACH LANDING SHALL NOT BE LESS THAN THE DOOR SERVED.

- EVERY LANDING SHALL HAVE A MIN. DIMENSION OF 36 INCHES MEASURED IN THE DIRECTION OF TRAVEL (CRC311.3)

WINDOW NOTES:

- ALL WINDOWS SHALL BE INSTALLED IN ACCORDANCE WITH MANUFACTURER'S REQUIREMENTS, INCLUDING FLASHING

- WINDOWS IN BEDROOMS SHALL MEET ALL OF THE FOLLOWING EMERGENCY ESCAPE AND RESCUE REQUIREMENTS (CRC310.1):
MIN 5.7 S.F. OF OPENABLE AREA (5.0 S.F. FOR GRADE LEVEL BEDROOMS)
MIN 20" CLEAR WIDTH AND 24" CLEAR HEIGHT WHEN OPEN
MAX SILL HEIGHT OF 44" FROM FINISHED FLOOR TO BOTTOM OF THE CLEAR OPENING

WINDOW INFORMATION:

FRAME: VINYL
U VALUE: 0.25
SHGC: 0.21
ENERGY STAR CERTIFIED: YES
LOW E GLASS: YES

LIGHT & VENTILATION CALCULATIONS

- ALL HABITABLE ROOMS ARE REQUIRED TO HAVE NATURAL LIGHT SIZED TO A MIN. OF 8% OF THE FLOOR AREA AND VENTILATION SIZED TO A MIN OF 4% OF THE FLOOR AREA.

AGING IN PLACE DESIGN AND FALL PROTECTION (2025 CRC R327):

1. INTERIOR DOORS

- AT LEAST ONE BATHROOM AND ONE BEDROOM ON THE ENTRY LEVEL SHALL PROVIDE A DOORWAY WITH A NET CLEAR OPENING OF NOT LESS THAN 32 INCHES, MEASURED WITH THE DOOR POSITIONED AT AN ANGLE OF 90 DEGRESS FROM THE CLOSED POSITION; OR, IN THE CASE OF A TWO- OR THREE-STORY SINGLE FAMILY DWELLING, ON THE SECOND OR THIRD FLOOR OF THE DWELLING IF A BATHROOM OR BEDROOM IS NOT LOCATED ON THE ENTRY LEVEL, PER 2025 CRC R327.1.3

2. DOORBELL BUTTONS

- DOORBELL BUTTONS OR CONTROLS, WHEN INSTALLED, SHALL NOT EXCEED 48 INCHES ABOVE EXTERIOR FLOOR OR LANDING, MEASURED FROM THE TOP OF THE DOORBELL BUTTON ASSEMBLY. WHERE DOORBELL BUTTONS INTEGRATED WITH OTHER FEATURES ARE REQUIRED TO BE INSTALLED ABOVE 48 INCHES MEASURED FROM THE EXTERIOR FLOOR OR LANDING, A STANDARD DOORBELL BUTTON OR CONTROL SHALL ALSO BE PROVIDED AT A HEIGHT NO EXCEEDING 48 INCHES ABOVE EXTERIOR FLOOR OR LANDING, MEASURED FROM THE TOP OF THE DOORBELL BUTTON OR CONTROL, PER 2025 CRC R327.1.4

3. ELECTRICAL RECEPTACLE OUTLET, SWITCH, AND CONTROL HEIGHTS

- ALL ELECTRICAL RECEPTACLE OUTLET, SWITCH AND CONTROL HEIGHTS TO BE LOCATED NO MORE THAN 48 INCHES MEASURED FROM THE TOP OF THE OUTLET BOX AND NOT LESS THAN 15 INCHES ABOVE THE FINISH FLOOR, PER 2025 CRC R327.1.2

4. REINFORCEMENT FOR GRAB BARS

- AT LEAST ONE BATHROOM ON THE ENTRY LEVEL SHALL BE PROVIDED WITH REINFORCEMENT INSTALLED IN ACCORDANCE WITH THIS SECTION. WHERE THERE IS NO BATHROOM ON THE ENTRYL LEVEL, AT LEASET ONE BATHROOM ON THE SECOND OR THIRD FLOOR OF THE DWELLING SHALL COMPLY WITH THIS SECTION.

A. REINFORCEMENT SHALL BE SOLID LUMBER OR OTHER CONSTRUCTION MATERIALS APPROVED BY THE ENFORCING AGENCY.

B. REINFORCMENT SHALL NOT BE LESS THAN 2 BY 8 INCH NOMINAL LUMBER OR OTHER CONSTRUCTION MATERIAL PROVIDING EQUAL HEIGHT AND LOAD CAPACITY. REINFORCEMENT SHALL BE LOCATED BETWEEN 32 INCHES AND 39 1/4 INCHES ABOVE THE FINISHED FLOOR FLUSH WITH THE WALL FRAMING.

C. WATER CLOSET REINFORCEMENT SHALL BE INSTALLED ON BOTH SIDE WALLS OF THE FIXTURE OR ONE SIDE WALL AND THE BACK WALL.

D. SHOWER REINFORCEMENT SHALL BE CONTINUOUS WHERE WALL FRAMING IS PROVIDED.

E. BATHTUB AND COMBINATION BATHTUB/SHOWER REINFORCEMENT SHALL BE CONTINUOUS ON EACH END OF THE BATHTUB AND THE BACK WALL. ADDITIONALLY, BACK WALL REINFORCEMENT FOR A LOWER GRAB BAR SHALL BE PROVIDED WITHT HE BOTTOM EDGE LOCATED NO MORE THAN 6 INCHES ABOVE THE BATHTUB RIM

BATH & KITCHEN NOTES:

- MAX FLOW RATE OF KITCHEN FAUCETS SHALL NOT EXCEED 1.8 GALLONS PER MIN AT 60 PSI (CAL GREEN 4.303.1.4.4)

- WHERE A FIXTURE COMES IN CONTACT WITH THE WALL OR FLOOR, THE JOINT BETWEEN THE FIXTURE AND THE WALL OR FLOOR SHALL BE MADE WATER TIGHT AS PER CPC 402.2

- THE INSTALLATION OF A LISTED COOKING APPLIANCE OR MICROWAVE OVEN OVER A LISTED COOKING APPLIANCE SHALL CONFORM TO THE CONDITIONS OF THE UPPER APPLIANCE'S LISTING AND THE MANUF. INSTALLATION INSTRUCTIONS.

- FIXTURES SHALL BE SPACED IN ACCORDANCE WITH THE CALIFORNIA PLUMBING CODE.

- NO WATER CLOSET OR BIDET SHALL BE SET CLOSER THAN 15 INCHES FROM ITS CENTER TO A SIDE WALL OR OBSTRUCTION NOR CLOSER THAN 30 INCHES CENTER TO CENTER TO A SIMILAR FIXTURE. THE CLEAR SPACE IN FRONT OF A WATER CLOSET, LAVATORY, OR BIDET SHALL BE NOT LESS THAN 24 INCHES.

- BATHTUB AND SHOWER FLOORS AND WALLS ABOVE BATHTUBS WITH INSTALLED SHOWER HEADS AND IN SHOWER COMPARTMENTS SHALL BE FURNISHED WITH A NONABSORBENT SURFACE. SUCH SURFACES SHALL EXTEND TO A HEIGHT OF NOT LESS THAN 6 FT ABOVE THE FLOOR (CRC 307.2).

WATER HEATER NOTES:

- MANUFACTURE'S INSTALLATION INSTRUCTIONS FOR THE WATER HEATER AND ALL OTHER LISTED APPLIANCES SHALL BE AVAILABLE TO THE FIELD INSPECTOR AT THE TIME OF INSPECTIONS PER 2025 CRC SEC. R106.

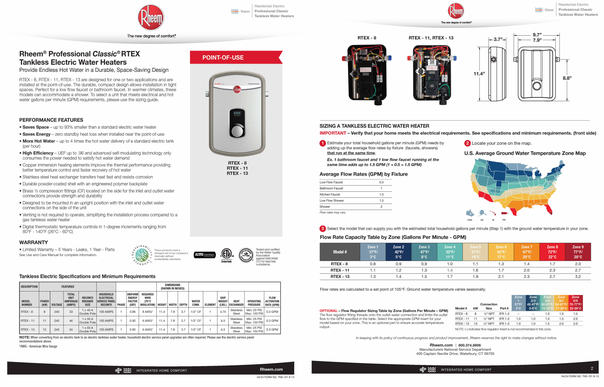

WATER HEATER TECHNICAL SPECIFICATIONS - MODEL#RTEX-08



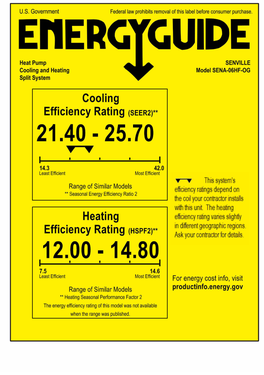

MINI-SPLIT TECHNICAL SPECIFICATIONS - #SENA-06HF-16

That ADU Guy LLC

THATADUGUY.COM

Designer signature,
C P Dharmasenage

NEW ACCESSORY DWELLING UNIT

REVISIONS

No.	Description	Date
1	Revision 1	

FLOOR PLAN

Project number	N/A
Date	05/24/26
Drawn by	C P DHARMASENAGE
Checked by	Checker

A-2.0

Scale As indicated

11/15/2026 10:44:22 AM

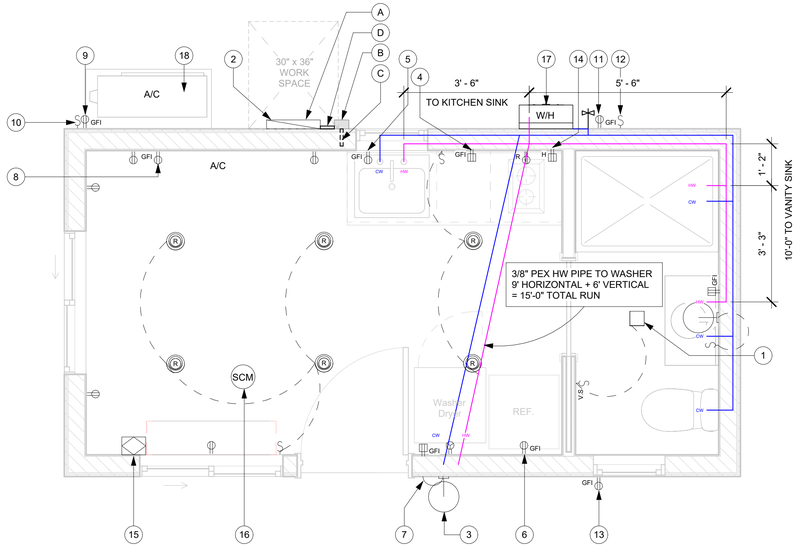

1 ELECTRICAL PLAN
1/2" = 1'-0"

NOTE: EQUIPMENT REQUIRING ELECTRICAL CONNECTIONS OF MORE THAN 50 VOLTS SHALL HAVE A POSITIVE MEANS OF DISCONNECT ADJACENT TO AND IN SIGHT FROM THE EQUIPMENT SERVED. A 120 VOLT RECEPTACLE SHALL BE LOCATED WITHIN 25 FEET OF THE EQUIPMENT FOR SERVICE AND MAINTENANCE PURPOSES.

IF NEW ELECTRIC SERVICE IS PROPOSED, OWNER SHALL COORDINATE W/ UTILITY COMPANY

NOTE: ALL ELECTRICAL RECEPTACLE OUTLET, SWITCH AND CONTROL HEIGHTS TO BE LOCATED NO MORE THAN 48 INCHES MEASURED FROM THE TOP OF THE OUTLET BOX AND NOT LESS THAN 15 INCHES ABOVE THE FINISH FLOOR, PER 2025 CRC R327.1.2

NOTE: ADU WILL BE FULLY ELECTRIC

PLUMBING SYMBOLS

CW = COLD WATER TAP CONNECTION

HW = HOT WATER TAP CONNECTION

SOLAR KEY READY NOTES

A. THE MAIN ELECTRICAL SERVICE PANEL SHALL NOT BE OF A TYPE WITH A CENTER FED MAIN CIRCUIT BREAKER AND SHALL INCLUDE RESERVED SPACE ALLOWING FOR INSTALLATION OF DOUBLE-POLE CIRCUIT BREAKERS FOR A SOLAR PHOTOVOLTAIC SYSTEM. SUCH RESERVED SPACE SHALL BE POSITIONED AT THE OPPOSITE (LOAD) END FROM THE INPUT FEEDER OR MAIN CIRCUIT BREAKER LOCATION.

B. APPROVED MINIMUM 4-INCH SQUARE ELECTRICAL JUNCTION BOX LOCATED WITHIN 72 INCHES HORIZONTALLY AND 12 INCHES VERTICAL OF MAIN ELECTRICAL SERVICE PANEL

C. MINIMUM 1 INCH DIAMETER LISTED ELECTRICAL METALLIC RACEWAY ORIGINATING FROM WITHIN PROXIMITY TO SOLAR ZONE AREA AND TERMINATING AT THE REQUIRED ELECTRICAL JUNCTION BOX

D. MINIMUM 1 INCH DIAMETER LISTED ELECTRICAL METALLIC RACEWAY ORIGINATING AT THE REQUIRED ELECTRICAL JUNCTION BOX AND TERMINATING AT THE MAIN ELECTRICAL SERVICE PANEL

ELECTRICAL NOTES:

1. PROVIDE 2 OR MORE 20-AMP SMALL APPLIANCE BRANCH CIRCUITS TO SERVE ALL COUNTERTOP, WALL AND FLOOR RECEPTACLES IN THE KITCHEN, PANTRY, BREAKFAST ROOM, DINING ROOM, OR SIMILAR AREAS. RECEPTACLE OUTLETS SHALL BE INSTALLED AT EACH WALL, ISLAND, AND PENINSULA COUNTER SPACE IN KITCHENS AND DINING ROOMS. SUCH CIRCUITS SHALL HAVE NO OTHER OUTLETS.

2. PROVIDE GFCI PROTECTION TO ALL 125 VOLT, 15 AND 20 AMP RECEPTACLES SERVING COUNTERTOP SURFACES IN KITCHENS, WITHIN 6 FEET OF LAUNDRY, UTILITY AND WET BAR SINKS, IN BATHROOMS, GARAGES AND ACCESSORY BUILDINGS, CRAWL SPACES, UNFINISHED BASEMENTS AND BOATHOUSES.

3. RECEPTACLE OUTLETS SHALL BE INSTALLED SO THAT NO POINT ALONG THE FLOOR LINE IN ANY WALL SPACE IS MORE THAN 6 FEET MEASURED HORIZONTALLY, FROM AN OUTLET IN THAT SPACE. RECEPTACLE OUTLETS ARE REQUIRED IN WALLS 2 FEET OR GREATER. HALLWAYS OF 10 FEET OR MORE IN LENGTH SHALL HAVE AT LEAST ONE RECEPTACLE OUTLET.

4. NEW 120-VOLT, SINGLE PHASE, 15- AND 20 AMPERE BRANCH CIRCUITS SUPPLYING OUTLETS OR DEVICES INSTALLED IN DWELLING UNIT KITCHEN, FAMILY ROOMS, DINING ROOMS, LIVING ROOMS, PARLORS, LIBRARIES, DENS, BEDROOMS, SUNROOMS, RECREATION ROOMS, CLOSETS, HALLWAYS, LAUNDRY AREAS, OR SIMILAR ROOMS OR AREAS SHALL BE PROTECTED BY A LISTED ARC-FAULT CIRCUIT INTERRUPTER (AFCI), COMBINATION-TYPE, INSTALLED TO PROVIDE PROTECTION OF THE BRANCH CIRCUIT. REFERENCE CEC ART. 210.12(A).

5.DWELLINGS WITH DIRECT GRADE LEVEL ACCESS SHALL HAVE AT LEAST ONE RECEPTACLE OUTLET WITHIN 6.5 FEET OF GRADE LEVEL AT THE FRONT AND BACK OF THE DWELLING. ALL 125 VOLT, 15 AND 20 AMP, RECEPTACLES INSTALLED OUTDOORS SHALL BE GFCI PROTECTED. RECEPTACLES INSTALLED OUTDOORS IN AN EXTERIOR WET LOCATION SHALL HAVE AN ENCLOSURE THAT IS WEATHERPROOF WHETHER OR NOT THE ATTACHMENT PLUG CAP IS INSERTED.

6. AT LEAST ONE WALL SWITCH-CONTROLLED LIGHTING OUTLET SHALL BE INSTALLED IN EVERY HABITABLE ROOM, IN BATHROOM, HALLWAYS, STAIRWAYS, ATTACHED GARAGES, DETACHED GARAGES WITH ELECTRIC POWER, AND AT OUTDOOR ENTRANCES OR EXITS.

7. LOCATION AND INSTALLATION REQUIREMENTS FOR LUMINARIES SHALL COMPLY WITH ALL APLLICABLE PROVISIONS OF THE 2025 CALIFORNIA ELECTRICAL CODE ARTICLE 410. FIXTURES SHALL BE SECURELY SUPPORTED.

8. A FIXTURE THAT WEIGHS MORE THAN 6 POUNDS OR EXCEEDS 16 INCHES IN ANY DIMENSION SHALL NOT BE SUPPORTED BY THE SCREW SHELL OF A LAMP HOLDER.

9. OUTLET BOXES OR OUTLET BOX SYSTEMS USED AS THE SOLE SUPPORT OF A CEILING-SUSPENDED FAN SHALL BE LISTED AND MARKED BY THE MANUF. AS SUITABLE FOR THIS PURPOSE. THE REQUIRED MARKING SHALL INCLUDE THE MAX. WEIGHT TO BE SUPPORTED FOR CEILING FANS THAT WEIGH MORE THAN 35 LBS.

10. TYPE NM AND NMS CABLES SHALL NOT BE PERMITTED IN WET OR DAMP LOCATIONS.

11. FLEXIBLE METAL CONDUIT (FMC) IS NOT PERMITTED IN A WET LOCATION

12. LUMINAIRES INSTALLED IN WET OR DAMP LOCATIONS SHALL BE INSTALLED SUCH THAT WATER CANNOT ENTER OR ACCUMULATE IN WIRING COMPARTMENTS, LAMPHOLDERS, OR OTHER ELECTRICAL PARTS. ALL LUMINAIRES INSTALLED IN WET LOCATIONS SHALL BE MARKED, "SUITABLE FOR WET LOCATIONS." ALL LUMINAIRES INSTALLED IN DAMP LOCATIONS SHALL BE MARKED "SUITABLE FOR WET LOCATIONS" OR "SUITABLE FOR DAMP LOCATIONS.".

13. ALL 15 AND 20 AMPERE, 120 AND 125 VOLT EXTERIOR RECEPTACLES SHALL BE PROTECTED BY AN "IN-USE" WEATHERPROOF COVER.

14. BATHROOM RECEPTACLES WILL BE SUPPLIED BY AT LEAST ONE 20 AMP BRANCH CIRCUITS.

15. ALL NEW NON-LOCKING-TYPE 125-VOLT, 15- AND 20-AMPERE RECEPTACLES SHALL BE LISTED TAMPER-RESISTANT RECEPTACLES

16. COUNTER TOP RECEPTACLES IN THE KITCHEN, NOOK PANTRIES, DINING ROOMS AND SIMILAR AREAS SHALL BE SPACED SUCH THAT ANY POINT ALONG THE WALL AT THE COUNTER LEVEL IS NOT MORE THAN 2 FEET FROM A RECEPTACLE. ANY COUNTER SPACE MORE THAN 12"" WIDE SHALL BE PROVIDED WITH A RECEPTACLE. PENINSULA OR ISLAND COUNTERS ARE TO BE PROVIDED WITH AT LEAST ONE RECEPTACLE, WHERE A RANGE, COUNTER-MOUNTED COOKING UNIT, OR SINK IS INSTALLED IN THE ISLAND WITH LESS THAN 12" OF COUNTER SPACE BEHIND THE FIXTURES, THE ISLAND OR PENINSULAR IS CONSIDERED AS TWO COUNTER SPACES. THESE RECEPTACLES ARE TO BE LOCATED NO MORE THAN 12" BELOW THE COUNTERTOP WHERE THE COUNTERTOP DOES NOT EXTEND MORE THAN 6" BEYOND ITS SUPPORT BASE. COUNTERTOPS INTERRUPTED BY RANGES, SINKS, OR OTHER APPLIANCES SHALL BE CONSIDERED SEPARATE COUNTERS.

17. GFIC PROTECTION IS REQUIRED FOR ALL 15A AND 20A, 125V RECEPTACLES INSTALLED IN THE FOLLWING LOCATIONS PER 2025 CEC ART 210.8(A)
- SINKS - GFCI PROTECTION FOR RECEPTACLES IN REQUIRED WITHIN AN ARC MEASUREMENT OF 6FT. FROM THE OUSIDE EDGE OF A SINK.
- BATH TUBS OR SHOWER STALLS - GFCI PROTECTION IS REQUIRED FOR RECEPTACLES LOCATED WITHIN 6FT. OF THE OUTSIDE EDGE OF A BATHTUB OR SHOWER STALL.
- LAUNDRY AREAS - RECEPTACLES INSTALLED IN LAUNDRY AREAS OF A DWELLING UNIT SHALL BE GFCI PROTECTED.
- DWELLING UNIT DISHWASHERS - OUTLETS (NOT REQUIRED FOR A HARDWIRED APPLIANCE) SUPPLYING DISHWASHERS IN A DWELLING UNIT MUST BE GFCI PROTECTED PER 2019 CEC ART. CEC 210.8

18. ALL PERMANENTLY INSTALLED LUMINAIRES IN DWELLING UNITS SHALL BE HIGH EFFICACY AND HAVE MANUAL ON/OFF CONTROLS AND VACANCY SENSORS OR DIMMERS EXCEPT FOR HALLWAYS & CLOSETS LESS THAN 70 SQ. FT.

19. EXHAUST FANS MUST BE SWITCHED SEPARATE FROM LIGHTING OR UTILIZE A DEVICE WHERE LIGHTING CAN BE TURNED OFF WHILE THE FAN IS RUNNING. EXCLUDES KITCHEN EXHAST HOODS.

20. UNDER CABINET MUST BE SWITCHED SEPARATE FROM ALL OTHER LIGHTING.

21. PERMANENTLY INSTALLED LIGHTING IN CABINETS MUST BE HIGH EFFICACY.

22. LIGHTING IN BATHROOMS, GARAGES, LAUNDRY ROOMS, AND UTILITY ROOMS MUST HAVE AT LEAST ONE LUMINAIR CONTROLLED BY VACANCY SENSORS.

23. PERMANENTLY INSTALLED OUTDOOR LIGHTING ATTACHED TO RESIDENCE OR OTHER BUILDING MUST BE HIGH EFFICACY AND MUST BE CONTROLLED BY A MANUAL ON AND OFF SWITCH AND ONE OF THESE CONTROL TYPES:
- PHOTO-CONTROL AND MOTION SENSOR OR
- PHOTO-CONTROL AND AUTOMATIC TIME SWITCH CONTROL OR ASTRONOMICAL TIME CLOCK THAT AUTOMATICALLY TURNS OUTDOOR LIGHTING OFF DURING DAYLIGHT HOURS OR
- ENERGY MANAGMENT CONTROL SYSTEM (EMCS) THAT PROVIDES THE FUNCTIONALITY OF AN ASTRONOMICAL TIME CLOCK.

SMOKE ALARM NOTES:

1. ALL SMOKE ALARMS SHALL BE LISTED IN ACCORDANCE WITH UL 217 AND INSTALLED IN ACCORDANCE WITH CODE SECTION R314 AND THE HOUSEHOULD FIRE WARNING EQUIPMENT PROVISIONS OF NFPA 72.

2. SMOKE ALARMS SHALL BE INSTALLED IN THE FOLLOWING LOCATIONS:
- IN EACH SLEEPING ROOM.
- OUTSIDE EACH SEPARATE SLEEPING AREA IN THE IMMEDIATE VICINITY OF THE BEDROOMS.

3. WHEN MORE THAN ONE SMOKE ALARM IS REQUIRED TO BE INSTALLED WITHIN AN INDIVIDUAL DWELLING UNIT THE ALARM DEVICES SHALL BE INTERCONNECTED IN SUCH A MANNER THAT THE ACTUATION OF ONE ALARM WILL ACTIVATE ALL OF THE ALARMS INTHE INDIVIDUAL UNIT.

4. SMOKE ALARMS SHALL RECEIVE THEIR PRIMARY POWER FROM THE BUILDING WIRING PROVIDED THAT SUCH WIRING IS FROM A COMMERICAL SOURCE AND SHALL BE EQUIPPED WITH A BACKUP BATTERY.

CARBON MONOXIDE ALARM NOTES:

1. SINGLE AND MULTIPLE STATION CARBON MONOXIDE ALARMS SHALL BE LISTED AS COMPLYING WITH THE REQUIREMENTS OF UL2034. CARBON MONOXIDE DETECTORS SHALL BE LISTED AS COMPLYING WITH THE REQUIREMENTS OF UL2075. CARBON MONOXIDE ALARMS AND DETECTORS SHALL BE INSTALLED IN ACCORDANCE WITH R315, THE CURRENT EDITION OF NFPA 720, AND THE MANUF. INSTALLATION INSTRUCTIONS.

2. CARBON MONOXIDE ALARMS SHALL BE INSTALLED IN THE FOLLOWING LOCATIONS:
- OUTSIDE EACH SEPARATE DWELLING UNIT SLEEPING AREA IN THE IMMEDIATE VICINITY OF BEDROOMS.
- ON EVERY LEVEL OF A DWELLING UNIT INCLUDING BASEMENTS.

3. WHERE MORE THAN ONE CARBON MONOXIDE ALARM IS REQUIRED TO BE INSTALLED WITHIN THE DWELLING UNIT OR WITHIN A SLEEPING UNIT THE ALARM SHALL BE INTERCONNECTED IN A MANNER THAT ACTIVATION OF ONE ALARM SHALL ACTIVATE ALL OF THE ALARMS IN THE INDIVIDUAL UNIT.

4. CARBON MONOXIDE ALARMS SHALL RECEIVE THEIR PRIMARYNPOWER FROM THE BUILDING WIRING PROVIDED THAT SUCH WIRING IS FROM A COMMERICAL SOURCE AND SHALL BE EQUIPPED WITH A BACKUP BATTERY.

5. CARBON MONOXIDE ALARMS COMBINED WITH SMOKE ALARMS SHALL COMPLY WITH SECTION R315, ALL APPLICABLE STANDARDS, AND REQUIREMENTS FOR LISTING AND APPROVAL BY THE OFFICE OF THE STATE FIRE MARSHALL, FOR SMOKE ALARMS.

ENERGY COMPLIANCE:

- SOLAR READY BUILDINGS, SHALL MEET THE REQUIREMENTS OF SECTION 110.10 APPLICABLE TO THE BUILDING PROJECT

- ENERGY STORAGE SYSTEMS (ESS) READY. ALL SINGLE FAMILY RESIDENCES THAT INCLUDE ONE OR TWO DWELLING UNITS SHALL MEET THE FOLLOWING. ALL ELECTRICAL COMPONENTS SHALL BE INSTALLED IN ACCORDANCE WITH THE CALIFORNIA ELECTRICAL CODE:

1. AT LEAST ONE OF THE FOLLOWING SHALL BE PROVIDED:
A. ESS READY INTERCONNECTION EQUIPMENT WITH A MINIMUM BACKED-UP CAPACITY OF 60 AMPS AND A MINIMUM OF FOUR ESS-SUPPLIED BRANCH CIRCUITS, OR
B. A DEDICATED RACEWAY FROM THE MAIN SERVICE TO A PANELBOARD (SUBPANEL) THAT SUPPLIES THE BRANCH CIRCUITS IN SECTION 150.0(S)(2). ALL BRANCH CIRCUITS ARE PERMITTED TO BE SUPPLIED BY THE MAIN SERVICE PANEL PRIOR TO THE INSTALLATION OF AN ESS. THE TRADE SIZE OF THE RACEWAY SHALL BE NOT LESS THAN 1 INCH. THE PANELBOARD THAT SUPPLIES THE BRANCH CIRCUITS (SUBPANEL) MUST BE LABELED "SUBPANEL" SHALL INCLUDE ALL BACKED-UP LOAD CIRCUITS.

2. A MINIMUM OF FOUR BRANCH CIRCUITS SHALL BE IDENTIFIED AND HAVE THERE SOURCE OF SUPPLY COLLOCATED AT A SINGLE PANELBOARD SUITABLE TO BE SUPPLIED BY THE ESS. AT LEAST ONE CIRCUIT SHALL SUPPLY THE REFRIGERATOR, ONE LIGHTING CIRCUIT SHALL BE LOCATED NEAR THE PRIMARY EGRESS AND AT LEAST ONE CIRCUIT SHALL SUPPLY A SLEEPING ROOM RECEPTACLE OUTLET.

3. THE MAIN PANELBOARD SHALL HAVE A MINIMUM BUSBAR RATING OF 225 AMPS

4. SUFFICIENT SPACE SHALL BE RESERVED TO ALLOW FUTURE INSTALLATION OF A SYSTEM ISOLATION EQUIPMENT/TRANSFER SWITCH WITHIN 3 FEET OF MAIN PANELBOARD. RACEWAYS SHALL BE INSTALLED BETWEEN THE PANELBOARD AND THE SYSTEM ISOLATION EQUIPMENT/TRANSFER SWITCH LOCATION TO ALLOW THE CONNECTION OF BACKUP POWER SOURCE.

- ELECTRIC COOKTOP READY. SYSTEMS USING GAS OR PROPANE COOKTOP TO SERVE INDIVIDUAL DWELLING UNITS SHALL INCLUDE THE FOLLOWING:

1. A DEDICATED 240 VOLT BRANCH CIRCUIT WIRING SHALL BE INSTALLED WITHIN 3 FEET FROM THE COOKTOP AND ACCESSIBLE TO THE COOKTOP WITH NO OBSTRUCTIONS. THE BRANCH CIRCUIT CONDUCTORS SHALL BE RATED AT 50 AMPS MINIMUM. THE BLANK COVER SHALL BE INDENTIFIED AS "240V READY." ALL ELECTRICAL COMPONENTS SHALL BE INSTALLED IN ACCORDANCE WITH THE CALIFORNIA ELECTRICAL CODE.

2. THE MAIN ELECTRICAL SERVICE PANEL SHALL HAVE A RESERVED SPACE TO ALLOW FOR THE INSTALLATION OF A DOUBLE POLE CIRCUIT BREAKER FOR A FUTURE ELECTRIC COOKTOP INSTALLATION. THE RESERVED SPACE SHALL BE PERMANENTLY MARKED AS "FOR FUTURE 240V USE."

ELECTRICAL PLAN NOTES	
Note #	Note Text
1	FAN (50 CFM) W/ LIGHT
2	100A ELEC. SUBPANEL W/ 225A BUS BAR RATING
3	EXTERIOR RATED LED LIGHT FIXTURE W/ DUSK-TO-DAWN SWITCH
4	ABV COUNTER OUTLET ON EA SIDE OF SINK PER CODE (TYP.)
5	POWER FOR GARBAGE DISPOSAL
6	POWER FOR REFRIGERATOR
7	BELL WIRING
8	POWER FOR MINI-SPLIT AIR HANDLER
9	EXTERIOR RATED OUTLET FOR A/C CONDENSOR
10	A/C DISCONNECT
11	EXTERIOR RATED OUTLET FOR WATER HEATER
12	W/H DISCONNECT
13	WEATHERPROOF, 120 V OUTLET (TYP.)
14	DEDICATED RECEPTACLE FOR RANGE HOOD, LOCATED INSIDE CABINET (VERIFY HEIGHT W/ CABINET INSTALLER)
15	ERV- PANASONIC (FV-06VE1) OR SIMILAR. LOCATION TO BE DETERMINED BY OWNER/ CONTRACTOR
16	SMOKE/CO ALARM SHALL BE INSTALLED ON THE SLOPED CEILING WITHIN 36" OF THE HIGH SIDE (PEAK), BUT NOT CLOSER THAN 4" FROM ADJOINING WALL SURFACES, PER 2025 NFPA 72 §29.11.3.2.
17	RHEEM PROFESSIONAL CLASSIC, 8.0-kW 1.95-GPM TANKELESS ELECTRIC W/H. MODEL #RTEX-08. INSTALLED IN A WALL MOUNTED STEEL ENCLOSURE W/ IP66 WATERPROOF, DUSTPROOF OUTDOOR ENCLOSURE
18	Senville AURA Series Mini Split Air Conditioner Heat Pump 6000 BTU 208/230V. Model #SENA-06HF-16

ELECTRICAL LEGEND			
	STANDARD DUPLEX RECEPTACLE - WALL-MOUNT ON FLUSH OUTLET BOX +18"AFF	S	WALL SWITCH
GFI	GFCI-TYPE DUPLEX RECEPTACLE - WALL-MOUNT ON FLUSH OUTLET BOX +18"AFF. GFI CIRCUITS TO BE DEDICATED.	S3	SWITCH - THREE-WAY
GFI	GFCI-TYPE DUPLEX RECEPTACLE - WALL-MOUNT ON FLUSH OUTLET BOX +44"AFF(UNO). GFI CIRCUITS TO BE DEDICATED.		ENERGY STAR RATED FAN W/ SEPERATE SWITCH, HUMIDITY SENSOR & 50 CFM
	(1) 220V + (1) 120V GFI-TYPE OUTLETS - WALL-MOUNT ON FLUSH 2-GANG OUTLET BOX +18"AFF.	S G.D	GARBAGE DISPOSAL SWITCH
R	OUTLET - RANGE	S V.S	VACANCY SENSOR
SCM	SMOKE AND CARBON MONOXIDE DETECTOR	R	RECESSED LIGHT
	CEILING FAN		WALL LAMP

PLUMBING FIXTURE SCHEDULE		
FIXTURE	MAX. FLOW RATE	CODE REF.
WATER CLOSET (TOILET)	1.28 GPF (GALLONS PER FLUSH)	CGBC 4.303.1.1
KITCHEN FAUCET	1.8 GPM @ 60 PSI	CGBC 4.303.1.4.3
LAVATORY FAUCET	1.2 GPM @ 60 PSI	CGBC 4.303.1.4.1
SHOWER HEAD	1.8 GPM @ 60 PSI	CGBC 4.303.1.3.1

POINT OF USE DISTRIBUTION MANDATORY REQUIREMENTS

- WATER HEATER DISTRIBUTION IS DESIGNATED AS 'POINT OF USE' PER CF1R.
- MAXIMUM DEVELOPED PIPE LENGTH FROM WATER HEATER TO ANY FIXTURE SHALL NOT EXCEED 10 FEET FOR 1/2" PIPE PER CEC RA4.4.5.
  15 FEET FOR 3/8" PIPE PER CEC RA4.4.5.
- ALL HOT WATER PIPING SHALL BE INSULATED WITH A MINIMUM OF R-4 INSULATIO
- HERS RATER FIELD VERIFICATION IS REQUIRED PER RA3.6.5.

TANKLESS W/H SERVICE VALVE KIT DETAIL

WATER HEATER. INSTALL WITH A LEAD-FREE TANKLESS SERVICE VALVE KIT CONSISTING OF FULL-PORT ISOLATION VALVES AND INTEGRATED HOSE BIBBS ON BOTH THE COLD WATER INLET AND HOT WATER OUTLET TO ALLOW FOR FLUSHING AND MAINTENANCE PER 2025 CPC SECTION 501.1.

TANKLESS W/H SERVICE KIT -
(3/4" NPT CONNECTIONS)

1 - COLD WATER SUPPLY ISOLATION VALVE
2 - HOT WATER OUTLET ISOLATION VALVE
3 - HOSE BIBB & VALVE FOR FLUSHING
4 - PRESSURE RELIEF VALVE

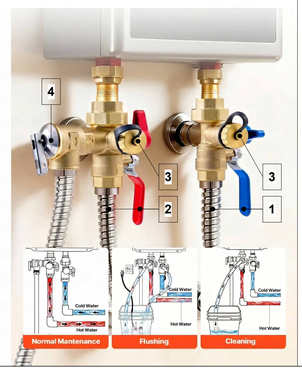

WhisperComfort 60 Energy Recovery Ventilator

FV-06VE1

Specification Submittal Data / Panasonic ERV

Description:
UL Listed ceiling or wall mount Energy Recovery Ventilator provides a tempered fresh air supply and balanced exhaust air flow to maintain neutral pressure in residential homes. The WhisperComfort® 60 is not for use as a bathfan.

Motor/Blower:
- ERV supply and exhaust rates shall be manually adjustable for 20 - 30 - 40 - 50 CFM
- Two fully enclosed Panasonic DC Electronic Commutated Motors (ECM) rated for continuous duty
- ERV shall have Hi / Lo speed on/off control capability
- The ERV wiring shall be 120 volts and 60 Hz.
- Two highly efficient blower wheels running on two motors for lower power consumption and quiet operation.
- Motors are equipped with thermal cut-off fuse control.

Housing:
- Corrosion Resistant and Galvanized steel body
- 3 Pressure ports allow for easy airflow verification
- Supply, Intake and exhaust ducts. 5" Duct connections are also available.
- Built-in backdraft damper on exhaust duct
- Filters on supply and exhaust air extend the life of the ERV core.
- Adjustable mounting bracket up to 14" on center.

Grille:
- Attractive design using Polypropylene material.
- Attaches directly to housing with torsion springs.

Warranty:
- DC Motors: 6 years from original purchase date
- ERV Core: 10 years from original purchase date.

Architectural Specifications:
ERV shall be ceiling or wall mount type with built-in speed selectors for both Supply and Exhaust air, select from 20/30/40/50 CFM. ERV shall have Hi / Lo speed on/off control and 40 CFM net supply airflow at 0.7 in. w.g. in accordance with HVI 915 standards. ERV shall have 70 CFM net supply airflow at 0.7 in. w.g. with HVI 915 standards. ERV shall have HI/Lo Speed Occupant Controlled Boost Capability to 60 CFM net supply airflow at 0.7 in. w.g. Sensible Recovery Efficiency for heating shall be 67% at 32°F (0°C) and 75% at 32°F (0°C) as tested in accordance with CSA C439-16. Total Recovery Efficiency for cooling shall be no less than 40% at 77 CFM net supply airflow 95°F (35°C) outdoor air temperature and 75°F (24°C) indoor temperature per ASHRAE 84-2013. Unit shall be totally enclosed DC brushless motors with permanent magnet rotors rated at 120v/60hz. Duct diameters shall be no less than 4". ERV can be used to comply with ASHRAE 62.2, ASHRAE 90.1, California Title 24, and IRA Energy Code Credits.

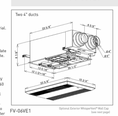

Maintenance:
MERV 13 filter included, replacements available

ERV Core Technology:
- Indoor and outdoor air passes through independent channels in the energy core. This process isolates supply air while transferring moisture and energy.
- The ERV core's design prevents the core from freezing. Frost Prevention Mode is free of interaction and operates without intervention.

Performance Specifications - WhisperComfort® 60 FV-06VE1

Mode	Supply Temperature		Out Air Flow		Power Consumption	Sensible Recovery Efficiency	Adjusted Sensible Recovery Efficiency	Net Moisture Transfer
	°F	°C	CFM	L/s	W	%	%	g/h
Heating	32	0	40	20	34	75%	75%	0.0
	32	0	30	15	27	69%	67%	0.0
Cooling	95	35	50	25	50		Total Recovery Efficiency	Net Moisture Transfer
							47%	0.0

Sound Specifications- WhisperComfort® 60 FV-06VE1

	Static Pressure - W.G.		Outside Air (dB)		Supply (dB)		Room Absorption
	in.	mm	1m	3m	1m	3m	sq ft
4" Duct	0.02	5	40	32	36	28	1.2
	0.1"	25	55		50		1.3
	0.2"	51	61		57		2.0
	0.3"	76	64		60		2.3
	0.4"	102	66		63		2.5

For complete Installation Instructions visit **aq.na.panasonic.com**

Panasonic
300 Erie blvd
Two Riverfront Plaza
Syracuse, NY 13202
aq.na.panasonic.com

ARZ0526R7

Panasonic

MECHANICAL VENTILATION & IAQ COMPLIANCE NOTE (PC2. M2):

1. PROVIDE PANASONIC WHISPERCOMFORT 60 (FV-06VE1) ERV AS SHOWN ON PLANS AND DETAILED ON MFR SUBMITTAL SHEET.

2. SYSTEM TO BE MANUALLY ADJUSTED BY INSTALLER TO THE 20 CFM SPEED SETTING TO MATCH AND SATISFY THE MODELED 19 CFM INDOOR AIR QUALITY (IAQ) REQUIREMENT IN THE ENERGY CALCULATIONS.

3. SOUND RATING: CERTIFIED AT 0.9 SONES OR LES (COMPLIES WITH CEnC 150.0(o) & ASHRAE 62.2 MANDATE OF 1.0 SONE MAXIMUM FOR CONTINUOUS RUN).

4. CONTROL METHOD: DUAL DC ECM MOTORS HARDWIRED FOR CONTINUOUS 24/7 OPERATION WITH OCCUPANT SPEED BOOST CAPABILITY TO 60 CFM. PROVIDE A WALL OVERRIDE SWITCH LABELED: "MECHANICAL VENTILATION SYSTEM - LEAVE ON."

5. LOCATION: CEILING-MOUNTED IN MAIN BED & LIVING AREA SPACE. UNIT IS NOT RATED FOR BATHROOM INSTALLATION PER MANUFACTURER LISTING INSTRUCTIONS.

That ADU Guy LLC

THATADUGUY.COM

Designer signature,
C P Dharmasenage

NEW ACCESSORY DWELLING UNIT

REVISIONS

No.	Description	Date
1	Revision 1	

ELECTRICAL & PLUMBING PLAN

Project number	N/A
Date	05/24/26
Drawn by	C P DHARMASENAGE
Checked by	Checker
Scale	As indicated

A-2.1

11/15/2026 10:44:23 AM

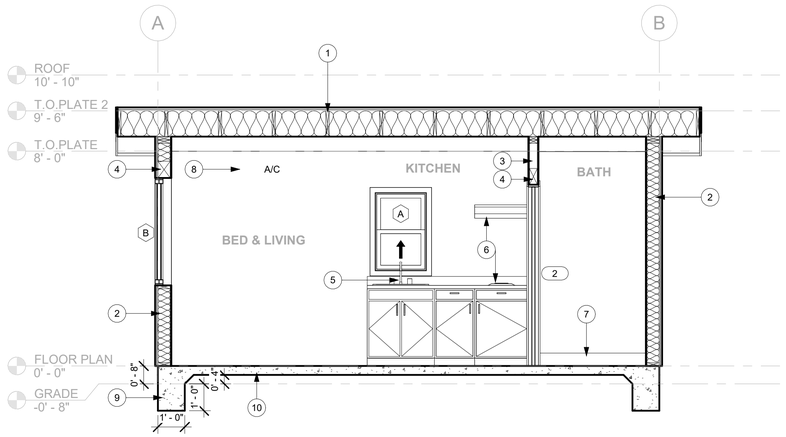

1 KITCHEN WALL SECTION
3/8" = 1'-0"

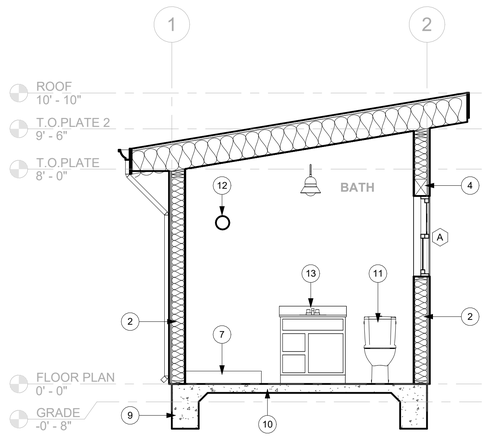

2 BATH WALL SECTION
3/8" = 1'-0"

INTERIOR SECTION NOTES	
Note #	Note Text
1	2x12 DF-L#2 ROOF RAFTERS @ 24" O.C. W/ R-23 INSULATION W/ 1" AIR GAP
2	2x6 WOOD STUD @ 16 O.C. W/ ROCKWOOL COMFORTBATT (R-23) INSULATION + 2" POLYISO RIGID IN. (R-13)
3	2x4 WOOD STUD @ 16 O.C. INTERIOR WALL
4	INSULATED HEADER PER FRAMING PLAN
5	25" SINK
6	12" ELEC. COOKTOP W/ EXHAUST HOOD ABOVE (280 CFM), VENT TO EXTERIOR PER CODE
7	48" x 34" SHOWER W/ SHOWER CURTAIN
8	MINI-SPLIT AIR HANDLER
9	12"x12" DEEP CONTINUOUS MONOLITHIC FTG.
10	4" CONC. SLAB ON GRADE OVER 4" OF CRUSHED ROCK
11	TOILET
12	SHOWER HEAD AND CONTROL VALVES
13	VANITY SINK

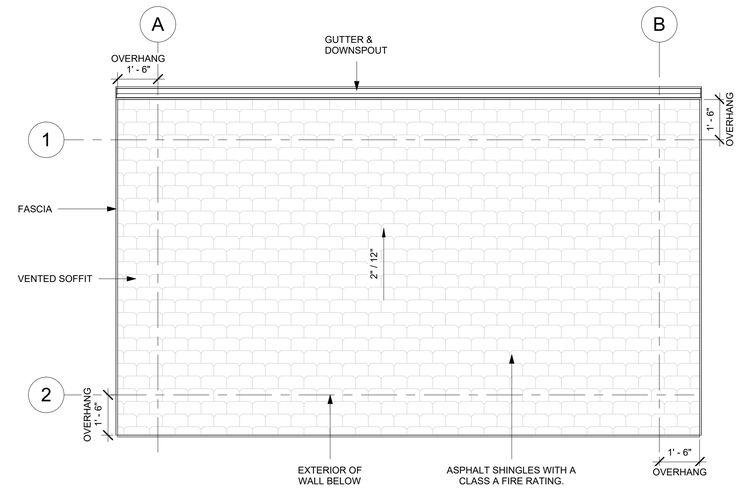

3 ROOF PLAN
3/8" = 1'-0"

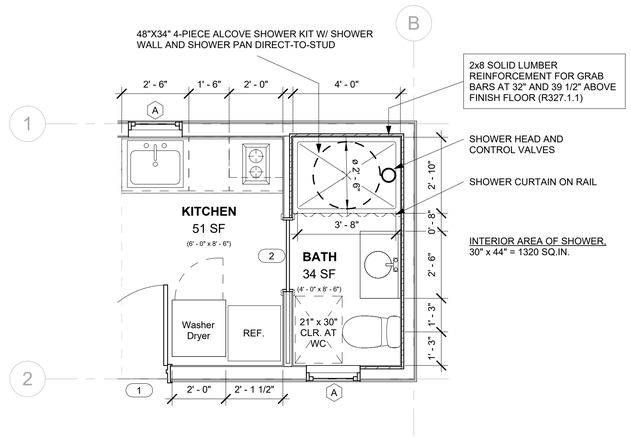

4 KITCHEN & BATH CALLOUT
3/8" = 1'-0"

DOOR SCHEDULE						
Type Mark	Width	Height	Operation	Count	GLAZED - U-FACTOR	GLAZED-SHGC
1	3' - 0"	6' - 8"	SWING	1	0.27	0.23
2	2' - 8"	6' - 8"	POCKET	1		

WINDOW SCHEDULE						
Type Mark	Width	Height	Operation	Count	U-FACTOR	SHGC
A	2' - 0"	3' - 0"	SINGLE-HUNG	2	0.25	0.21
B	4' - 0"	4' - 0"	SLIDING	2	0.25	0.21

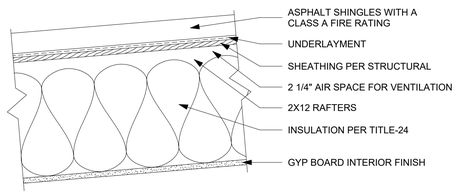

5 ROOF SECTION
1 1/2" = 1'-0"

That ADU Guy LLC

THATADUGUY.COM

Designer signature,
C P Dharmasenage

NEW ACCESSORY DWELLING UNIT

REVISIONS

No.	Description	Date
1	Revision 1	

ROOF PLAN & INTERIOR SECTIONS

Project number	N/A
Date	05/24/26
Drawn by	C P DHARMASENAGE
Checked by	Checker
	A-2.2
Scale	As indicated

11/15/2026 10:44:23 AM

NEW BUILDING ADDRESS NUMBERS SHALL BE A MINIMUM OF 4 INCHES HIGH PER SECTION 505.3. ADDRESS NUMBERS SHALL BE INTERNALLY OR EXTERNALLY ILLUMINATED AT NIGHT PER SECTION 505.3.2. WHERE EXTERNAL ILLUMINATION IS UTILIZED, IT SHALL PROVIDE AN INTENSITY OF NOT LESS THAN 5.0 FOOT-CANDLES. ALL NUMBERS SHALL BE OF A CONTRASTING COLOR TO THEIR BACKGROUND AND POSITIONED TO BE PLAINLY LEGIBLE FROM THE PUBLIC WAY.

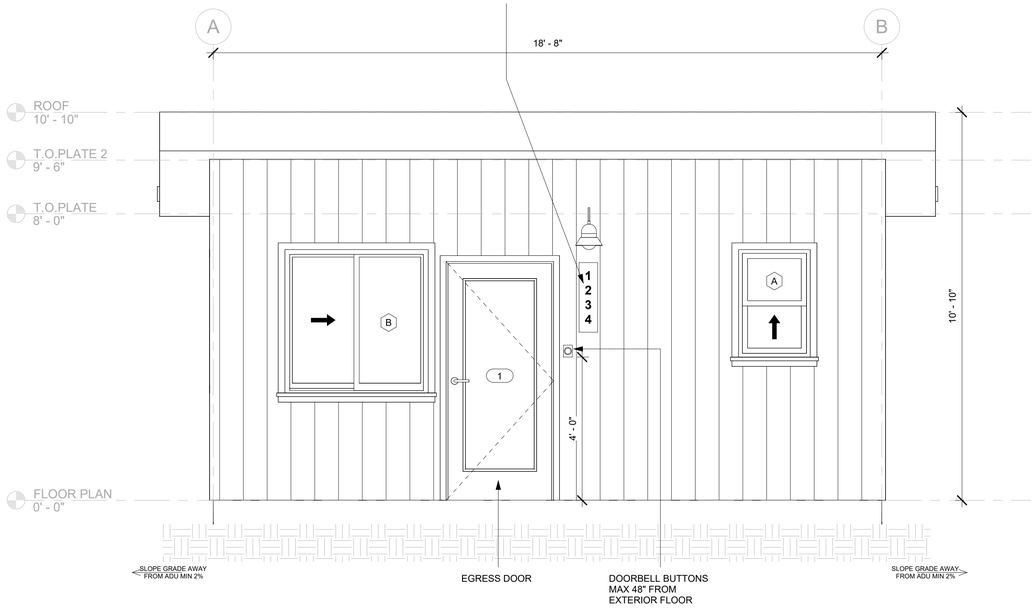

1 SOUTH
1/2" = 1'-0"

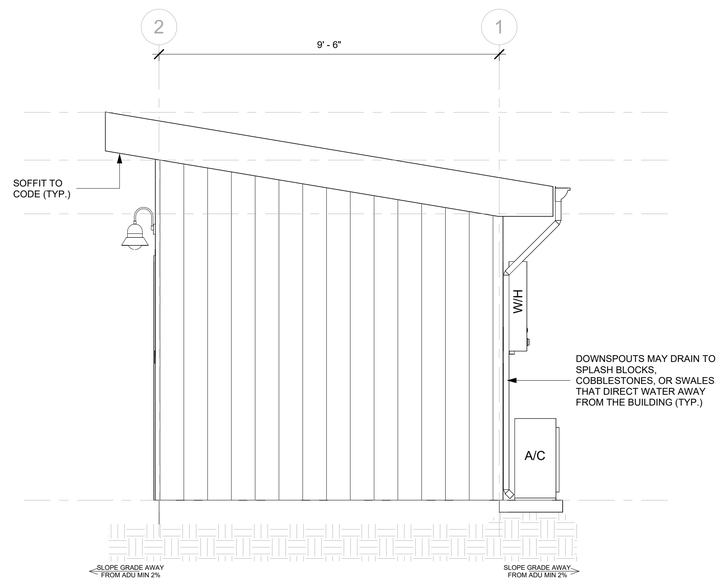

2 EAST
1/2" = 1'-0"

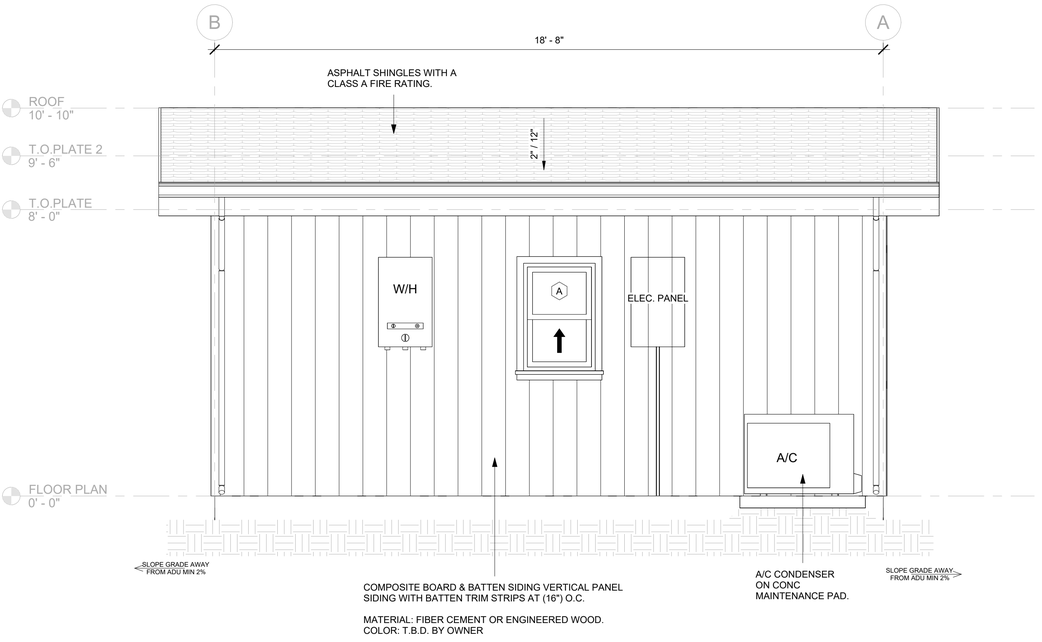

3 NORTH
1/2" = 1'-0"

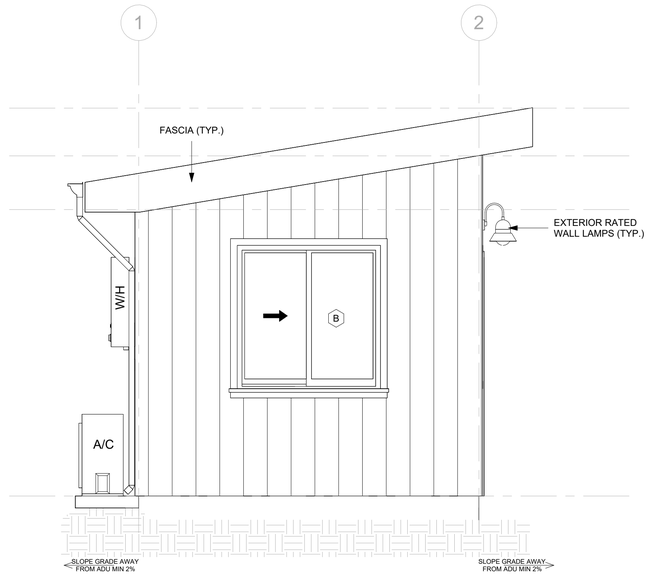

4 WEST
1/2" = 1'-0"

ADDRESS NUMBER NOTES:

- THE ADDRESS IDENTIFICATION SHALL BE LEGIBLE AND PLACED IN A POSITION THAT IS VISIBLE FROM THE STREET OR ROAD FRONTING THE PROPERTY.

- ADDRESS IDENTIFICATION CHARACTERS SHALL CONTRAST WITH THEIR BACKGROUND.

- ADDRESS NUMBERS SHALL BE ARABIC NUMBERS OR ALPHABETICAL LETTERS. NUMBERS SHALL NOT BE SPELLED OUT.

- EACH CHARACTER SHALL BE NOT LESS THAN 4 INCHES IN HEIGHT WITH A STROKE WIDTH OF NOT LESS THAN 0.5 INCH.

- WHERE REQUIRED BY THE FIRE CODE OFFICIAL, ADDRESS IDENTIFICATION SHALL BE PROVIDED IN ADDITIONAL APPROVED LOCATIONS TO FACILITATE EMERGENCY RESPONSE.

- WHERE ACCESS IS BY MEANS OF A PRIVATE ROAD AND THE BUILDING ADDRESS CANNOT BE VIEWED FROM THE PUBLIC WAY, A MONUMENT, POLE OR OTHER SIGN OR MEANS SHALL BE USED TO IDENTIFY THE STRUCTURE. ADDRESS IDENTIFICATION SHALL BE MAINTAINED. CRC 2025 R319

That ADU Guy LLC

THATADUGUY.COM

Designer signature,

C P Dharmasenage

NEW ACCESSORY DWELLING UNIT

REVISIONS

No.	Description	Date
1	Revision 1	

EXTERIOR ELEVATIONS

Project number	N/A
Date	05/24/26
Drawn by	C P DHARMASENAGE
Checked by	Checker

A-3.1

Scale 1/2" = 1'-0"

11/15/2026 10:44:24 AM

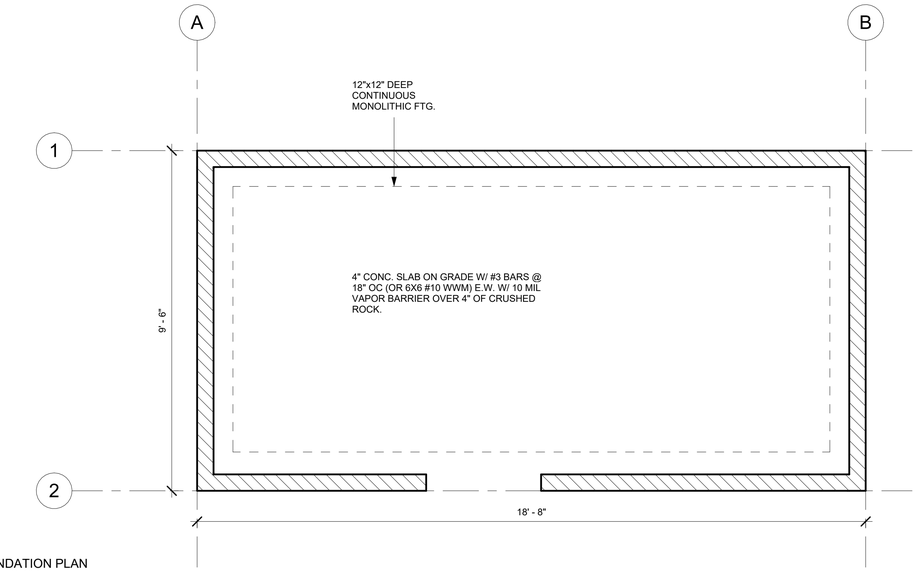

1 FOUNDATION PLAN
1/2" = 1'-0"

ROOF FRAMING NOTES

1. SEE SHEET SD1 AND SD2 FOR ADDITIONAL FRAMING DETAILS.
2. ALL BEAM SUPPORTING POSTS ARE TO BE AT LEAST THE WIDTH OF THE BEAM BEING SUPPORTED.
3. ROOF SHEATHING SHALL BE 1532" STRUCT GRADE I WITH 8d @ 6" OC EN & 6" OC FIELD NAILING, U.N.O. 6" EDGE & 6" FIELD AT EAVE END & OVERHANGS. 3216 SPAN RATING.
4. NO EDGE BLOCKING REQUIRED, U.N.O.
5. TOP PLATE SPLICE AT INTERIOR AND EXTERIOR WALLS SHALL BE 48" MIN. LENGTH AND NAILED WITH (16) 16d NAILS.
6. FOR BUILT-UP COLUMNS, PROVIDE (2) 10d NAILS @ 8" OC TO PROVIDE SOLID CONNECTION.
7. EXTERIOR STUD WALLS SHALL BE 2X6 DF-L#2 @16" OC U.N.O.. WALL SIZES SHALL BE VERIFIED TO MATCH THE ARCHITECTURAL PLAN SET.
8. BEAMS MAY BE SUBSTITUTED FOR LARGER WIDTHS AND/OR DEPTH OF EQUAL SPECIFICATIONS TO ACCOMMODATE WALL FRAMING. POSTS SHALL BE EQUAL OR LARGE SIZE THAN BEAM WIDTH.
9. ALL WOOD EXPOSED TO WATER FROM DIRECT OR BLOWING RAIN, SNOW, OR IRRIGATION TO BE PRESSURE TREATED.

GENERAL FOUNDATION NOTES

1. THE CONTRACTOR IS RESPONSIBLE FOR REFERRING TO THE PLANS TO VERIFY HOLDOWN LOCATIONS, STRUCTURAL PLYWOOD SHEATHING SPECIFICATIONS AND NAILING SCHEDULE.
2. POSTS SHOWN ON THE FOUNDATION PLAN ARE THOSE DIRECTLY CONNECTED TO THE FOUNDATION WITH A HOLDOWN OR POST BASE CONNECTOR.
3. TYPICAL ONE STORY FOUNDATION, U.N.O. - 12" WIDE X 12" DEEP FOOTING WITH (1) #4 REBAR TOP AND BOTTOM (TOT. 2).
4. PROVIDE 58"X10" ANCHOR BOLTS @ 4'-0" OC AND 12" FROM ALL EDGES AT THE BEARING WALLS AND EXTERIOR NON-SHEAR WALLS W/ 7" MIN. EMBEDMENT. FASTEN TO BOTTOM PLATE USING 3"X3"X14" STEEL WASHERS.
5. PROVIDE 2X PTDF SLEEPER EMBEDDED IN SLAB AT DOORS LEADING TO EXTERIOR AND GARAGE. EXTEND 6" PAST DOOR CASING. (2) 20d @ EA END & 24" OC
6. ALL FOOTINGS, FOUNDATIONS, EXCAVATIONS, GRADING, AND FILL SHALL COMPLY TO THE PROVISIONS OF THE CALIFORNIA BUILDING CODE.
7. SLAB REINFORCEMENT SHALL BE PROVIDED EACH WAY, AS INDICATED ON THE PLANS, IN THE MIDDLE THIRD OF SLAB. WHERE VAPOR BARRIER IS REQUIRED, VAPOR RETARD BARRIER SHALL BE SEALED AT ALL PENETRATIONS AND SHALL CONFORM TO CLASS A VAPOR RETARDER IN ACCORDANCE WITH THE MOST CURRENT VERSION OF ASTM E 1745, "STANDARD SPECIFICATIONS FOR PLASTIC WATER VAPOR RETARDER USED IN CONTACT WITH SOIL OR GRANULAR FILL UNDER CONCRETE SLABS". VAPOR BARRIER SHALL BE UNDERLAIN WITH 4" DEEP 34" CRUSHED ROCK WITH 100% PASSING THE 34" SIEVE AND LESS THAN 5% PASSING THE NO. 4 SIEVE.
8. CONTRACTOR IS RESPONSIBLE FOR VERIFYING ALL MEASUREMENTS AGAINST THE ARCHITECTURAL PLAN SET. ANY DISCREPANCIES SHALL BE BROUGHT TO THE ATTENTION OF THE EOR AND DESIGNER BEFORE FORMING AND/OR POURING CONCRETE.

FOOTING SCHEDULE

TYPE.	DIMENSIONS			REINFORCEMENT						MAX. CAPACITY	NOTES
				PARALLEL			PERPENDICULAR				
	LENGTH	WIDTH	DEPTH	NO.	SIZE	LENGTH	NO.	SIZE	LENGTH		
FT1	CONT.	12"	12"	2	#4	CONT.	-	-	-	1,500 PLF	(1)TOP, (1) BOT

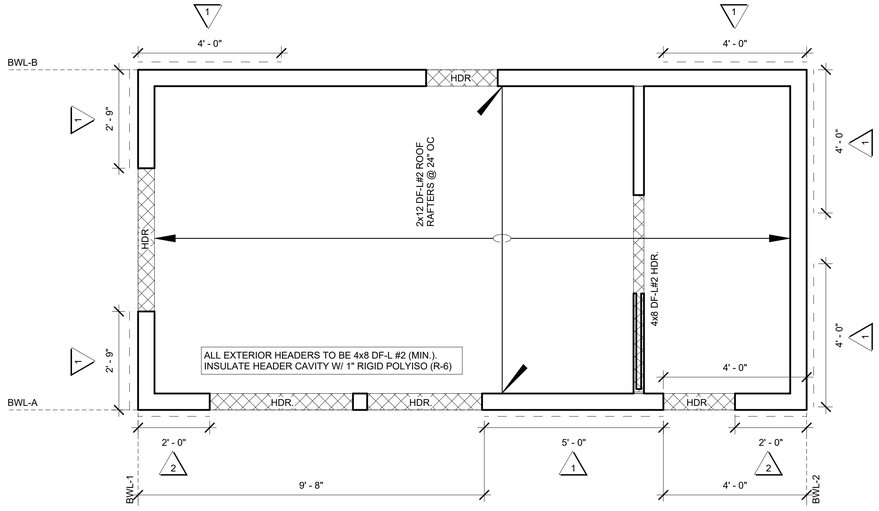

3 ROOF FRAMING & BRACE WALL
1/2" = 1'-0"

REQUIRED BRACE WALL LENGTH CALCULATION
METHOD = CS-WSP
HEIGHT ADJUSTMENT FACTOR PER SECTION R602.10.3.1 = 1.0

BWL-A

LENGTH REQ'D (INTERPOLATED FROM TABLE R602.10.3(3) & ADJUSTED FOR 9'-6" WALL HEIGHT PER TABLE R602.10.3(4)):
= [2.1 + (6.87 x 0.22)] x 1.15 = 4.15' (4'-2")
FINAL REQ'D LENGTH = 4' - 2"
PROVIDED LENGTH = 5' - 0"

5'-0" CONTRIBUTING PANEL (COMPLIES W/ CRC R602.10.2.2.1 SETBACK EXCEPTION: <10' FROM ENDS W/ 24" MIN. CORNER PANELS)

BWL-B

LENGTH REQ'D = 4'-0" (INTERPOLATED FROM TABLE R602.10.3(3))

FINAL REQ'D LENGTH = 4' - 0"
PROVIDED LENGTH = 8' - 0"

BWL-1

LENGTH REQ'D = 2' - 2" (FROM TABLE R602.10.3(3))

FINAL REQ'D LENGTH = 2' - 2"
PROVIDED LENGTH = 5' - 6"

BWL-2

LENGTH REQ'D = 2' - 2" (FROM TABLE R602.10.3(3))

FINAL REQ'D LENGTH = 2' - 2"
PROVIDED LENGTH = 8' - 0"

WOOD STRUCTURAL PANEL SHEATING

MARK	MINIMUM NAIL		MINIMUM WOOD STRUCTURAL PANEL SPAN RATING	MINIMUM NOMINAL PANEL THICKNESS (INCHES)	MAXIMUM WALL STUD SPACING (INCHES)	PANEL NAIL SPACING		MANDATORY HARDWARE
	SIZE	PENETRATION (INCHES)				EDGES (INCHES O.C.)	FIELD (INCHES O.C.)	
1	8D COMMON	1.75	24:16	7/16" (OR 15/32")	16	6	12	5/8" ANCHOR BOLTS @ 48" O.C.
2	8D COMMON	1.75	24:16	7/16" (OR 15/32")	16	3	12	SIMPSON STHD14 HOLDOWN STRAPS (OR EQUIVALENT)

WOOD STRUCTURAL PANELS SHALL CONFORM TO DOC PS 1, DOC PS 2 OR ANSI/APA PRP 210, CSA 0437 OR CSA O325, PANELS SHALL BE IDENTIFIED BY A GRADE MARK OR CERTIFICATE OF INSPECTION ISSUED BY AN APPROVED AGENCY VERTICAL JOINTS OF PANEL SHEATHING SHALL OCCUR OVER AND BE FASTENED TO COMMON STUDS. HORIZONTAL JOINTS IN BRACED WALL PANELS SHALL OCCUR OVER AND BE FASTENED TO COMMON BLOCKING OF A MINIMUM 1 1/2 INCH THICKNESS.

That ADU Guy LLC

THATADUGUY.COM

Designer signature,
C P Dharmasenage

NEW ACCESSORY DWELLING UNIT

REVISIONS

No.	Description	Date
1	Revision 1	

FOUNDATION & FRAMING PLANS

Project number	N/A
Date	05/24/26
Drawn by	C P DHARMASENAGE
Checked by	Checker

S-1.0

Scale As indicated

11/15/2026 10:44:24 AM

CONCRETE

1. CONCRETE 28 DAY COMPRESSIVE STRENGTH, F'C = 2500PSI, U.N.O.

2. WATER TO CEMENT RATIO SHALL NOT EXCEED 0.50.

3. MOIST CURE SLABS FOR A MINIMUM OF 3 DAYS.

4. CONCRETE MIX DESIGN SHALL BE PREPARED BY A 3RD PARTY INDEPENDENT LABORATORY. SELECTION OF CONCRETE MIX PROPORTIONS SHALL BE PER THE CALIFORNIA BUILDING CODE.

5. CEMENT SHALL CONFORM TO ASTM C-150 TYPE I OR II.

6. CONCRETE AGGREGATES SHALL CONFORM TO ASTM C-33. AGGREGATES FOR LIGHTWEIGHT CONCRETE SHALL CONFORM TO ASTM C-330.

7. REINFORCING DIMENSIONS SHOWN FOR LOCATION OF REINFORCING ARE TO THE FACE OF MAIN BARS AND DENOTE CLEAR COVERAGE. CONCRETE COVERAGE SHALL BE AS FOLLOWS: CONCRETE DEPOSITED AGAINST GROUND (EXCEPT SLABS) -3". CONCRETE EXPOSED TO GROUND BUT PLACES IN FORMS -2". SLABS (ON GROUND) -2" CLEAR FROM TOP U.N.O.

8. ALL PREHEATING AND WELDING OF REINFORCING BARS SHALL BE DONE IN ACCORDANCE WITH AWS D1.4 LATEST EDITION AND SHALL BE CONTINUOUSLY INSPECTED BY A QUALIFIED LABORATORY. CONTRACTOR SHALL FURNISH TO THE LABORATORY, REBAR MILL CERTIFICATES.

9. REINFORCING STEEL SHALL BE FABRICATED ACCORDING TO "MANUAL OF STANDARD PRACTICE FOR REINFORCED CONCRETE CONSTRUCTION".

10. WIRE FABRIC SHALL CONFORM TO ACI 318-3.5.1, ACI 318-3.5.7, AND ASTM A-1064.

11. REINFORCING STEEL SHALL CONFORM TO ASTM A615-GRADE 60 FOR NO. 5 AND LARGER, AND ASTM A615-GRADE 40 FOR NO. 4 AND SMALLER, EXCEPT REINFORCING STEEL TO BE WELDED SHALL CONFORM TO ASTM A706.

12. SPLICES IN CONTINUOUS REINFORCEMENT FOR A CLASS "A" LAP SPLICE FOR NORMAL WEIGHT CONCRETE WHERE LESS THAN 12" OF CONCRETE IS BELOW THE LAP SPLICE SHALL BE 48 BAR DIAMETERS AND SPLICES IN ADJACENT BARS SHALL BE NOT LESS THAN 5'-0" APART. CLASS "B" LAP SPLICES SHALL BE 63 BAR DIAMETERS. SPLICE CONTINUOUS BARS IN SPANDRELS, GRADE BEAMS, ETC., AS FOLLOWS: TOP BARS AT MID-SPAN; BOTTOM BARS AT CENTERLINE AT SUPPORT, UNLESS NOTED OTHERWISE. SPLICES IN WWF SHALL BE 1.5 MESHES WIDE.

13. REINFORCING, DOWELS, BOLTS, ANCHORS, SLEEVES, ETC., TO BE EMBEDDED IN CONCRETE SHALL BE TIED SECURELY IN POSITION BEFORE PLACING CONCRETE PER ACI 318-12.18.

14. CONSTRUCTION JOINTS SHALL BE MADE ROUGH AND SURFACE FREE OF LOOSE DEBRIS. CONCRETE MY BE ROUGHENED BY SAND BLASTING OR CHIPPING THE ENTIRE SURFACE TO PRODUCE 14" DEEP DEFORMATIONS.

15. REMOVE ALL DEBRIS FROM FORMS BEFORE CASTING ANY CONCRETE.

16. 3'-0" SHALL BE THE MAXIMUM ALLOWED FREE FALL FOR CONCRETE TO MORE CLOSELY CONFORM TO ACI 318-5.10.

17. CONSOLIDATE CONCRETE PLACED IN FORMS BY MECHANICAL VIBRATING EQUIPMENT SUPPLEMENTED BY HAND-SPADING, RODDING OR TAMPING. USE EQUIPMENT AND PROCEDURES FOR CONSOLIDATION OF CONCRETE IN ACCORDANCE WITH THE RECOMMENDED PRACTICES OF ACI 309 TO SUIT THE TYPE OF CONCRETE AND PROJECT CONDITIONS.

18. NO WOOD SPREADERS ALLOWED. NO WOOD STAKES ALLOWED IN AREAS TO BE CONCRETED.

19. ALL SAW CUTTING SHALL BE DONE AFTER INITIAL SET HAS OCCURRED TO AVOID TEARING OR DAMAGE BY THE SWABBED, BUT BEFORE INITIAL SHRINKING HAS OCCURRED.

20. DRILL THROUGH STEEL COLUMNS, BEAMS AND PLATES TO PASS CONTINUOUS REINFORCING.

21. ADDITIONAL REINFORCING IN PRECAST OR TILT-UP PANELS REQUIRED FOR LIFTING STRESSES SHALL BE SUPPLIED BY THE CONTRACTOR.

22. PROVIDE 2-NO.5X4'-0" DIAGONAL REINFORCING AT MID-DEPTH OF SLAB AT ALL REENTRANT CORNERS TYPICAL.

FOUNDATIONS

1. BOTTOMS OF ALL FOUNDATIONS SHALL BE LEVEL. CHANGES IN BOTTOM OF FOUNDATION ELEVATION SHALL BE MADE ACCORDING TO STEPPED FOOTING DETAIL ON THE TYPICAL DETAIL SHEET.

2. ALL PILE CAPS, GRADE BEAMS, TIE BEAMS & OTHER FOOTINGS SHALL BE FORMED UNLESS SPECIFICALLY APPROVED BY THE ENGINEER OF RECORD. FOUNDATIONS MAY BE CAST IN NEAT EXCAVATIONS PROVIDED WRITTEN APPROVAL IS OBTAINED AND FOOTINGS ARE INCREASED 2" IN WIDTH. USE 2X12 PLANK AT EDGE OF EXCAVATION TO PROTECT AGAINST SLUFFING, AS REQUIRED.

3. WORK PERFORMED ON FOUNDATION SHALL BE DONE IN ACCORDANCE WITH THE REQUIREMENTS OF THE CURRENT CBC

4. IF A TWO POUR FOUNDATION IS UTILIZED, THE COLD JOINT BETWEEN THE EXTERIOR FOOTING AND SLAB-ON-GRADE SHOULD BE LOCATED AT LEAST 4 INCHES ABOVE ADJACENT GRADE. IF THIS IS NOT DONE, A WATERSTOP BETWEEN THE TWO POURS SHALL BE USED.

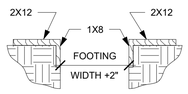

BRACE WALL

1. MIN 2X FRAMING MEMBERS OR BLOCKING REQUIRED AT ALL PANEL EDGES IN BRACE WALL.

2. TABLE VALUES ARE BASED ON 16" OC STUD SPACING.

3. ALL ANCHOR BOLTS IN WALLS INCLUDING BRACE WALLS REQUIRE 3"x3"x.229" THICK PLATE WASHERS. ONE EDGE OF THE STEEL PLATE WASHER SHALL EXTEND TO WITHIN 1/2" OF THE MUDSILL ON THE SIDE(S) WITH APA RATED WOOD SHEATHING. THE HOLE IN THE PLATE WASHER IS PERMITTED TO BE DIAGONALLY SLOTTED WITH A WIDTH OF UP TO 3/16" (44 mm) LARGER THAN THE BOLT DIAMETER AND A SLOT LENGTH NOT TO EXCEED 1 3/4" (44 mm), PROVIDED A STANDARD CUT WASHER IS PLACED BETWEEN THE PLATE WASHER AND THE NUT.

4. SOLE PLATE NAILING LESS THAN 6" OC SHALL BE STAGGERED 1/2" ABOUT THE CENTERLINE OF THE SOLID RIM.

5. (2) ANCHOR BOLTS MINIMUM PER BRACE WALL.

6. 3X and 4X MEMBERS AT ADJOINING PANEL EDGES MUST BE A SINGLE MEMBER.

7. FOR BRACE WALLS ON RAISED WOOD, FOUNDATIONS AND UPPER FLOORS REQUIRING LTP5 CLIPS AT THE 2x SOLE PLATE, A MINIMUM OF (1) CLIPS MUST ALWAYS BE INSTALLED.

8. SOLE PLATE TO RIM, OR SOLE PLATE TO BEAM/BLOCKING TO BE 2X U.O.N.

9. WHEN A BRACE WALL IS LOCATED IN A FIRE PROTECTED WALL, THE FIELD NAILING SHALL BE 8" OC MAX REGARDLESS OF THE SHEAR WALL SPECIFICATIONS. EN AND NAIL SIZE SHALL BE THE SAME AS SPECIFIED ON THE PLANS.

10. DRYWALL SCREWS ARE PERMITTED TO SUBSTITUTE FOR THE 5D AND 6D NAILS.

11. ALL FIELD NAILING SHALL BE @ 12" OC MAX., U.N.O.

NAILING SCHEDULE

REF. CBC 2025, TABLE 2304.10.2. ALL NAILS FOR STRUCTURAL WORK SHALL BE COMMON WIRE NAILS CONFORMING TO THE FOLLOWING MINIMUM SIZES:

8D	0.131" Ø X 2 1/2"
10D	0.148" Ø X 3"
10D SHORTS	0.148" Ø X 1 5/8" PLUS THICKNESS OF S.P.
16D	0.162" Ø X 3 1/2"
20D	0.192" Ø X 4"

HOLES SHALL BE SUB-DRILLED WHERE NECESSARY TO PREVENT SPLITTING. NAILING NOT NOTED BELOW OR ON PLANS SHALL BE MINIMUM OF NAILS AT EACH CONTACT. 8D NAILS FOR 1" MATERIAL AND 16D NAILS FOR 2" MATERIAL.

1.	BLOCKING BTWN CEILING JSTS, RAFTER OR TRUSS TO TOP PLATE OR FRAMING BELOW; EACH END, TOENAIL	3-8D
2.	BLOCKING BTWN RAFTERS OR TRUSS NOT AT THE WALL TOP PLATE, TO RAFTER OR TRUSS; EACH END, TOENAIL	2-8D
3.	FLAT BLOCKING TO TRUSS AND WEB FILLER; FACE NAIL	16D
4.	CEILING JST TO TOP PLATE; EACH JST, TOENAIL	3-8D
5.	CEILING JST NOT ATTACHED TO PARALLEL RAFTER, (NO THRUST); FACE NAIL	3-16D
6.	CEILING JST ATTACHED TO PARALLEL RAFTER (HEEL JOINT); FACE NAIL	TABLE 2308.7.3.1
7.	COLLAR TIE TO RAFTER; FACE NAIL	3-10D
8.	RAFTER OR ROOF TRUSS TO TOP PLATE; 2TOENAIL ONE SIDE, 1 OPPOSITE	3-10D
9.	ROOF RAFTERS TO RIDGE VALLEY OR HIP RAFTERS, OR ROOF RAFTERS TO 2" RIDGE BEAM; END NAIL	2-16D
10.	STUD TO STUD (NOT AT BRACED WALL PANELS); 24" OC FACE NAIL	16D
11.	STUD TO STUD AND ABUTTING STUDS AT INTERSECTING WALL CORNERS (AT BRACED WALL PANEL); 16" OC FACE NAIL	16D
12.	BUILT UP HEADER (2" TO 2" HEADER); 16" OC EACH EDGE, FACE NAIL	16D
13.	CONTINUOUS HEADER TO STUD; TOENAIL	4-8D
14.	TOP PLATE TO TOP PLATE; 16" OC FACE NAIL	16D
15.	TOP PLATE TO TOP PLATE, AT END JOINTS; EA. SIDE END, FACE NAIL, MIN 24" LAP	8-16D
16.	BOTTOM PLATE TO JST, RIM JST, BAND JST, OR BLOCKING (NOT AT BRACED WALL PANELS); 16" OC FACE NAIL	16D
17.	BOTTOM PLATE TO JST, RIM JST, BAND JST, OR BLOCKING AT BRACED WALL PANELS; 16" OC FACE NAIL	2-16D
18.	STUD TO TOP OR BOTTOM PLATE; TOENAIL	4-8D
19.	TOP OR BOTTOM PLATE TO STUD; END NAIL	2-16D
20.	TOP PLATES, LAPS AT CORNERS AND INTERSECTIONS; FACE NAIL	2-16D
21.	1" BRACE TO EACH STUD & PLATE, FACE NAIL;	2-8D
22.	1"X6" SHEATHING TO EACH BEARING; FACE NAIL	2-8D
23.	WIDER THAN 1"X8" SHEATHING TO EACH BEARING; FACE NAIL	3-8D
24.	JOIST TO SILL, TOP PLATE, OR GIRDER; TOENAIL	3-8D
25.	RIM JST, BAND JST, OR BLOCKING TO TOP PLATE, SILL, OR OTHER FRAMING; 6" OC TOENAIL	8D
26.	1" X 6" SUBFLOOR OR LESS TO EACH JST; FACE NAIL	2-8D
27.	2" SUBFLOOR TO JST OR GIRDER; BLIND AND FACE NAIL	2-16D
28.	2" PLANKS (PLANK & BEAM - FLOOR AND ROOF); EACH BEARING, FACE NAIL	2-16D
29.	BUILT UP GIRDERS AND BEAMS, 2" LUMBER LAYERS; 32" OC FACE NAIL TOP & BOT. STAGGERED ON OPP SIDES	20D
30.	LEDGER STRIP SUPPORTING JST OR RAFTERS; EACH JST OR RAFTER, FACE NAIL	3-16D
31.	JOIST TO BAND JOIST OR RIM JOIST; END NAIL	3-16D
32.	BRIDGING OR BLOCKING TO JST, RAFTER, OR TRUSS; EACH END, TOENAIL	2-8D
33.	WOOD STRUCTURAL PANELS, COMBINATION SUBFLOOR UNDERLAYMENT TO FRAMING	
	3/4" AND LESS	8D
	7/8" - 1"	8D
	1 1/8" - 114"	10D
34.	PANEL SIDING TO FRAMING	
	1/2" OR LESS	6D
	5/8"	8D

NAILS SPACED @ 6"OC AT EDGES, 6'OC @ INTERMEDIATE SUPPORT FOR ROOF EXCEPT AT 4" O.C. WHEN INTERMEDIATE SUPPORT EXCEEDS 48" O.C. AND WIND SPEED IS GREATER THAN 130MPH IN EXPOSURE B AND 110MPH IN C.

WOOD

1. ALL WOOD IN DIRECT CONTACT WITH EARTH OR CONCRETE SHALL BE PRESSURE TREATED DOUGLAS FIR.

2. BEARING AND SHEAR WALLS SHALL HAVE DOUBLE TOP PLATES, LAPPED AT WALL AND PARTITION INTERSECTION WITH 3-16D NAILS.

3. PROVIDE SOLID BLOCKING BETWEEN JOISTS AND RAFTERS AT ALL SUPPORTS.

4. PROVIDE BLOCKING AT ALL CEILING LEVELS.

5. ALL STRUCTURAL WOOD SHALL CONFORM WITH THE FOLLOWING SPECIFICATION:
DOUGLAS FIR - COAST REGION - WCLIB GRADING RULES NO.17 DF NO.2, U.N.O.
REDWOOD - CALIFORNIA REDWOOD ASSOCIATION GRADING RULES, LATEST EDITION.
GLUED LAMINATED BEAMS - SHALL BE 24F-V4 OR 24F-V8 FOR CANTILEVERED BEAMS. BEAMS SHALL ALSO BE MANUFACTURED AND IDENTIFIED AS REQUIRED IN ANSI/AITC A190.1 AND ASTM D3737. STANDARD SPEC. FOR STRUCTURAL GLUED LAMINATED TIMBER AITC 117 LATEST ADDITION. SUBMIT SHOP DRAWINGS PRIOR TO FABRICATION OF GLUED-LAMINATED MEMBERS.
PLYWOOD - U.S. PRODUCT STANDARDS PSI AND PS2. PLYWOOD SHALL BE APA RATED EXPOSURE 1, OR EXTERIOR, AS REQUIRED: STRUCTURAL 1 AND C-D TO MEET PS1 AND PS2 AS REQUIRED. CDX (C-D EXPOSURE 1) OR OSB (ORIENTED STRAND BOARD) @ FLOORS ADN ROOF - U.N.O.

6. PRESSURE TREATED DOUGLAS FIR - AWPA (AMERICAN WOOD PRESERVERS' ASSOCIATION) U1. USE CATEGORY UC2 FOR INTERIOR USE. WATERBORN PRESERVATIVES SHALL HAVE A MINIMUM RETENTION LEVEL OF 0.25 LB/FT^3 AND SHALL NOT CONTAIN CHROMIUM, COPPER, OR ARSENATE. NEWLY EXPOSED SURFACES, RESULTING FROM FIELD MODIFICATION SUCH AS CUTTING, BORING, OR HANDLING, SHALL BE FIELD TREATED IN ACCORDANCE WITH AWPA M-4.

7. HOLES FOR BOLTS IN WOOD SHALL BE BORED WITH A BIT OF THE SAME NOMINAL DIAMETER AS THE BOLT PLUS 116".

8. HOLES FOR LAG SCREW SHALL BE BORED TO THE SAME DIAMETER AND DEPTH AS THE SHANK AND THE REST NO LARGER THAN THE ROOT OF THE THREAD.

9. LAG SCREWS AND WOOD SCREWS SHALL BE SCREWED AND NOT DRIVEN INTO PLACE. SOAP MAY BE USED TO LUBRICATE THE SCREWS.

10. ALL BOLTS AND LAG SCREWS SHALL BE PROVIDED WITH METAL WASHERS UNDER HEADS AND NUTS WHICH BEAR ON WOOD. APPLIES ALSO TO INSERTED EXPANDING FASTENERS, RED HEAD ETC.

BOLT DIAMETER	MI WASHER	STEEL WASHER
1/2" DIA.	2" DIA. X 15/16"	3"X 3" X 1/4"
5/8" DIA.	2 3/4" DIA. X 15/16"	3"X 3" X 1/4"
3/4" DIA.	3" DIA. X 7/16"	3" X 3" X 5/16"
7/8" DIA.	3 1/2" DIA. X 7/16"	3 1/2" X 3 1/2" X 3/8"
1" DIA.	4" DIA. X 1/2"	3 3/4" X 3 3/4" X 3/8"

11. ALL BOLTS AND LAG SCREWS SHALL BE TIGHTENED ON INSTALLATION AND RETIGHTENED BEFORE CLOSING IN OR AT COMPLETION OF JOB.

12. BLOCK SP JOINTS WITH 2X4 FLAT BLOCKING WHERE NOTED ON ROOF OR FLOOR FRAMING PLANS AND WITH BLOCKING SAME AS STUDS AT WALLS.

13. LAY ALL STRUCTURAL PLYWOOD ON ROOF AND FLOORS WITH FACE GRAIN PERPENDICULAR TO SUPPORT UNLESS NOTED OTHERWISE.

14. CONNECTOR HARDWARE MODEL NUMBER ARE THOSE FOR SIMPSON STRONG-TIE COMPANY. EQUIVALENT CONNECTORS WITH ICC ACCEPTANCE MAY BE SUBSTITUTED WITH WRITTEN APPROVAL FROM THE ENGINEER OF RECORD. ALL JOIST HANGERS SHALL BE SIMPSON U SERIES UNLESS NOTED OTHERWISE.

15. FASTENERS FOR PRESERVATIVE TREATED & FIRE RETARDANT TREATED WOOD SHALL BE OF HOT DIPPED ZINC COATED GALVANIZED STEEL (PER ASTM A153, CLASS G185), STAINLESS STEEL, SILICON BRONZE OR COPPER. THE COATING WEIGHTS FOR ZINC COATED FASTENERS SHALL BE IN ACCORDANCE WITH ASTM A 153.

16. ALL WOOD FRAMING SHALL HAVE LESS THAN 19% MOISTURE CONTENT AT TIME OF INSTALLATION.

EN (EN) AS CALLED FOR ON PLANS & SECTIONS APPLIES TO EDGES OF ALL SHEETS & AT ALL INTERIOR LINES AS FOLLOWS:
AT SHEAR WALLS
1. WHERE SP CONTACTS WALL PLATES & SOLID BLOCKING OVER WALL CONSTRUCTION. SEE DETAILS ON THIS SHEET.
2. AT 4X STUD ADJACENT TO HOLDOWN STRAP SEE DETAIL ON THIS SHEET.

AT ROOF & FLOOR - DIAPHRAGMS
1. AT BLOCKING OR TOP P'S OVER SHEAR WALLS.
2. AT TIES & BEAM IN LINE WITH SHEAR WALLS.
3. ADDITIONAL NAILINGS AS NOTED ON DRAWINGS.

NOTES:
1. WHERE 8d NAILS ARE SPACED @ 2½"OC OR LESS OR 10d NAILS @ 3"OC OR LESS, NAILS SHALL BE STAGGERED & FRAMING SP JOINTS SHALL BE 3X OR LARGER.SEE DETAIL AT RIGHT.
2. WHERE 10d NAILS ARE SPACED @ 3"OC OR LESS, NAILS SHALL BE 10d SHORTS. SEE TYP NAILING SCHEDULE.
3. STAGGER SP JOINTS WHERE SHEAR WALL IS MORE THAN ONE VERTICAL PANEL IN HEIGHT.

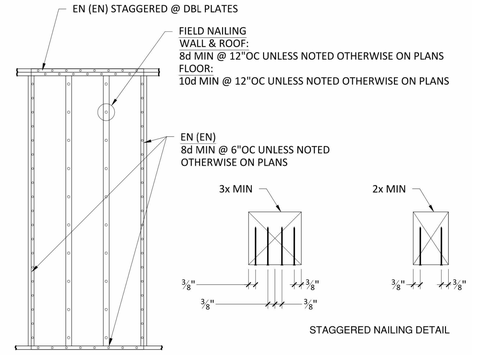

1 STRUCTURAL PLYWOOD & PLYWOOD SIDING NAILING

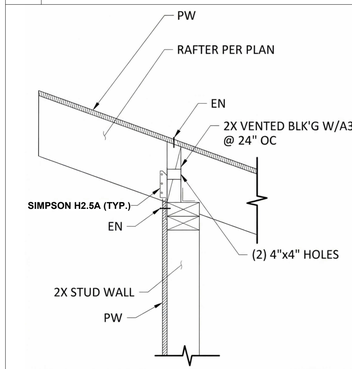

2 RAFTER TO WALL CONNECTION

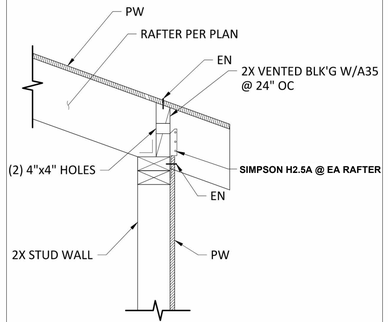

3 RAFTER TO WALL CONNECTION

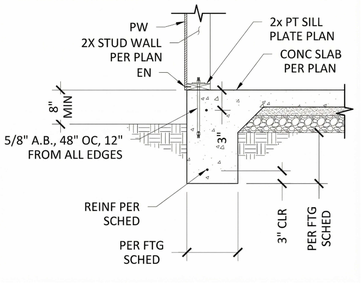

4 TYPICAL EXTERIOR FOOTING

That ADU Guy LLC

THATADUGUY.COM

Designer signature,
C P Dharmasenage

NEW ACCESSORY DWELLING UNIT

REVISIONS

No.	Description	Date
1	Revision 1	

STRUCTURAL NOTES

Project number	N/A
Date	05/24/26
Drawn by	C P DHARMASENAGE
Checked by	Checker

SD1

Scale As indicated

11/15/2026 10:44:25 AM

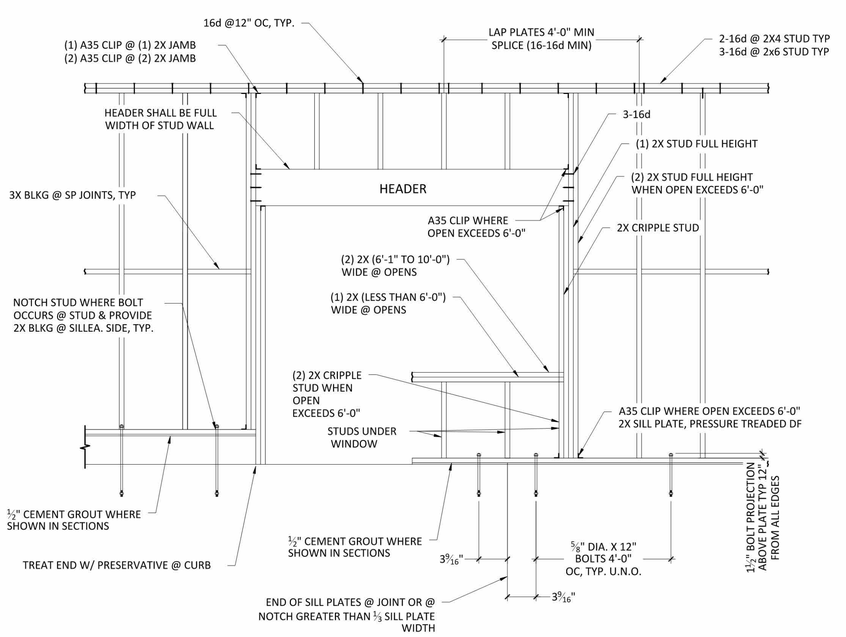

1 TYPICAL STUD WALL & OPEN FRAMING

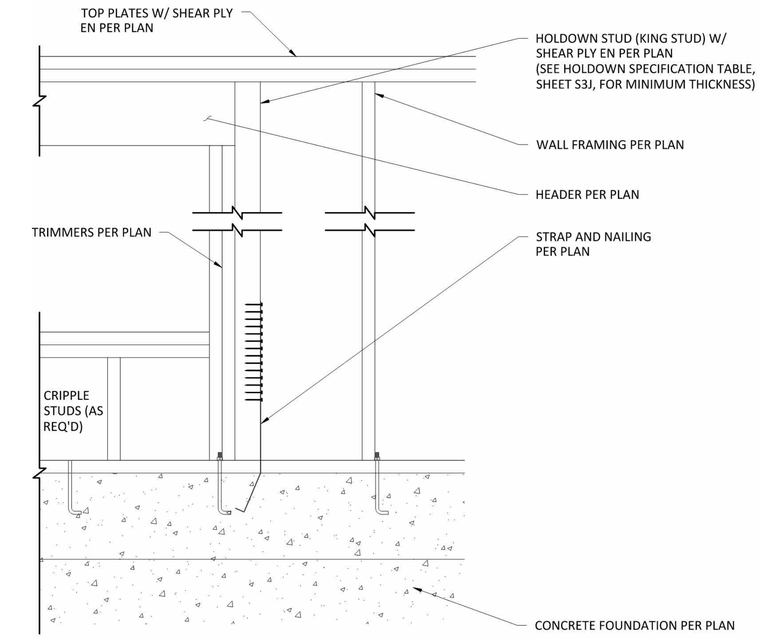

2 TYPICAL HOLDOWN AT WINDOW/DOOR

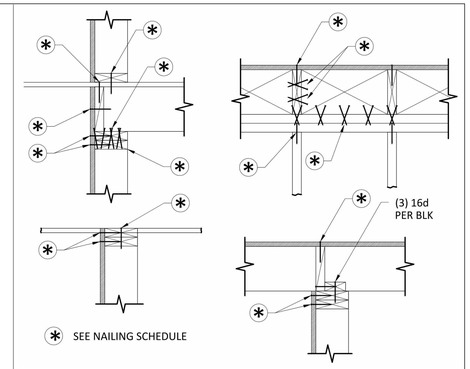

3 TYPICAL NAILING EXAMPLE

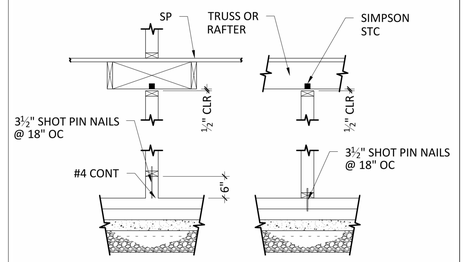

4 NON-BEARING PARTITION FRAMING

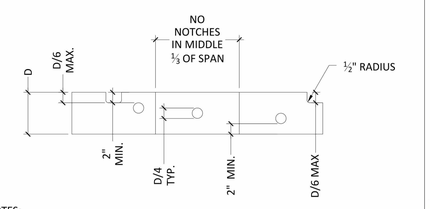

NOTES:
1. PREDRILL CORNERS OF NOTCHES SO AS NOT TO OVER CUT.
2. NOTCHES ON THE ENDS OF JOISTS & HEADERS SHALL NOT EXCEED ⅛ THE DEPTH.
3. NOTCHES IN THE TOP OF JOISTS SHALL NOT EXCEED ⅙ THE DEPTH AND SHALL NOT BE LOCATED IN THE MIDDLE THIRD OF THE SPAN.
4. NOTCHES ON THE BOTTOM OF JOISTS ALLOWED ONLY WHERE SPECIFICALLY SHOWN ON DRAWINGS.
5. HOLES BORED IN JOISTS SHALL NOT BE WITHIN 2 INCHES OF THE TOP OR BOTTOM AND SHALL NOT HAVE A DIAMETER LARGER THAN ¼ THE DEPTH.

5 NOTCHES & HOLES IN JOISTS & HEADERS

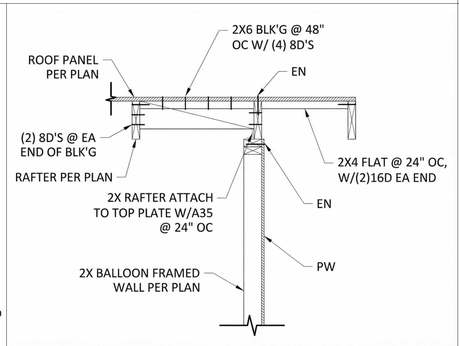

6 BALLOON FRAME WALL CONNECTION

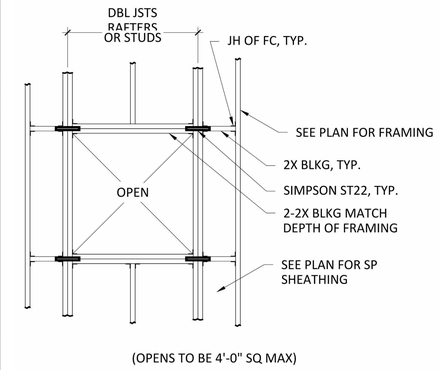

(OPENS TO BE 4'-0" SQ MAX)

7 TYPICAL OPEN IN ROOF OR WALL PLYWOOD DIAPHRAGM

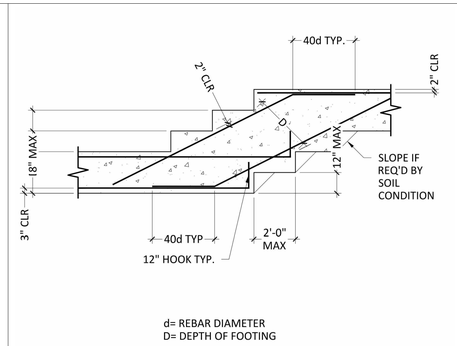

d= REBAR DIAMETER
D= DEPTH OF FOOTING

8 TYPICAL FOOTING STEP

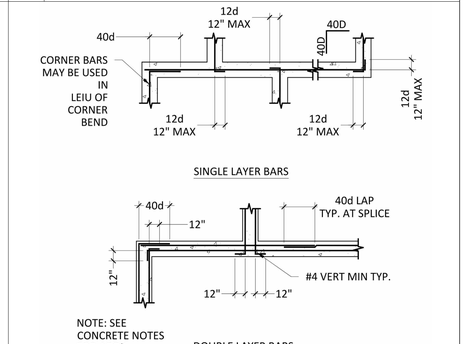

NOTE: SEE
CONCRETE NOTES
FOR ADD'L
REQUIREMENTS

DOUBLE LAYER BARS

9 TYPICAL CORNER REINFORCING

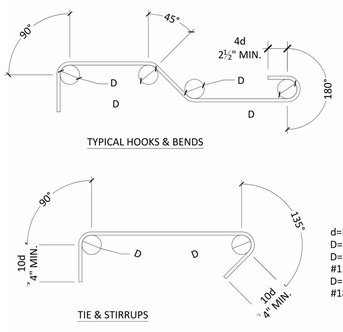

TYPICAL HOOKS & BENDS

TIE & STIRRUPS

d=REBAR DIAMETER
D=6d FOR #3 THRU #8
D=8d FOR #9 THRU
#11
D=10dFOR #14 THRU
#18

10 REBAR HOOK & BENDS

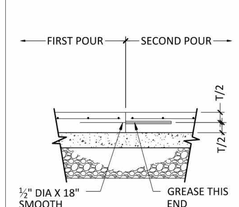

CONSTRUCTION JOINT (CJ)

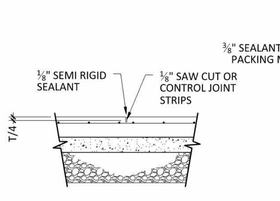

CONTROL JOINT (CTJ)

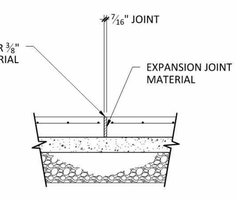

NOTE: REINFORCING DOES
NOT CONT. THRU JOINT

EXPANSION JOINT (EJ)

NOTE: CONSTRUCTION JOINTS & CONTROL JOINTS SHALL DIVIDE SLAB INTO AREAS NOT EXCEEDING 400 SQ. FT. WITHOUT REENTRANT CORNERS & WITH LENGTH TO WIDTH RATIOS NOT EXCEED 1.5 TO 1. JOINT SPACING SHALL NOT EXCEED 20' IN EITHER DIRECTION. SEMI-RIGID SEALANT TO BE METZGER/MCGUIRE "MM-80" OR EQUAL.

11 SLAB-ON-GRADE JOINT

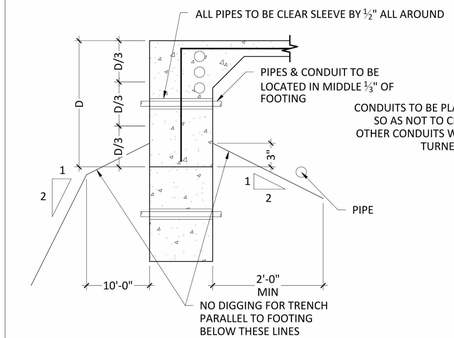

D=DEPTH OF FOOTING

12 CONCRETE FOOTING AT PIPES & CONDUITS

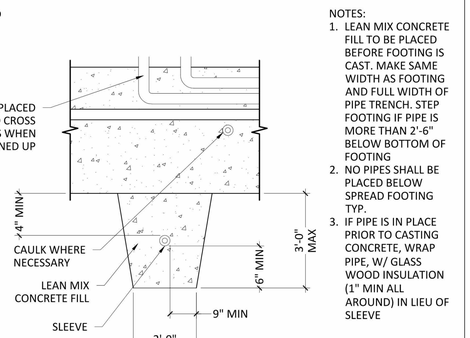

NOTES:
1. LEAN MIX CONCRETE FILL TO BE PLACED BEFORE FOOTING IS CAST. MAKE SAME WIDTH AS FOOTING AND FULL WIDTH OF PIPE TRENCH. STEP FOOTING IF PIPE IS MORE THAN 2'-6" BELOW BOTTOM OF FOOTING.
2. NO PIPES SHALL BE PLACED BELOW SPREAD FOOTING TYP.
3. IF PIPE IS IN PLACE PRIOR TO CASTING CONCRETE, WRAP PIPE, W/ GLASS WOOD INSULATION (1" MIN ALL AROUND) IN LIEU OF SLEEVE

That ADU Guy LLC

THATADUGUY.COM

Designer signature,
C P Dharmasenage

NEW ACCESSORY DWELLING UNIT

REVISIONS

No.	Description	Date

STRUCTURAL DETAILS

Project number	N/A
Date	05/24/26
Drawn by	C P DHARMASENAGE
Checked by	Checker

SD2

Scale

11/15/2026 10:44:27 AM

GENERAL INFORMATION					
01	**Project Name**	Trudy 150sf Detached ADU			
02	**Run Title**	Title-24 Analysis			
03	**Project Location**	_			
04	**City**	Folsom, CA	05	**Standards Version**	2025
06	**Zip code**	95630	07	**Software Version**	CBECC 2025.3.0
08	**Climate Zone**	12	09	**Front Orientation (deg/ Cardinal)**	All orientations
10	**Building Type**	Single family	11	**Number of Dwelling Units**	1
12	**Project Scope**	Newly Constructed	13	**Number of Bedrooms**	1
14	**Addition Cond. Floor Area (ft²)**	0	15	**Number of Stories**	1
16	**Existing Cond. Floor Area (ft²)**	n/a	17	**Fenestration Average U-factor**	0.25
18	**Total Cond. Floor Area (ft²)**	150	19	**Glazing Percentage (%)**	32.70%
20	**ADU Bedroom Count**	n/a	21	**ADU Conditioned Floor Area**	n/a
22	**Fuel Type**	All electric	23	**No Dwelling Unit:**	No

COMPLIANCE RESULTS

Building Complies with Computer Performance

This building incorporates features that require field testing and/or verification by a certified ECC rater under the supervision of a CEC-approved ECC provider.

This building incorporates one or more Special Features shown below

REQUIRED SPECIAL FEATURES

The following are features that must be installed as condition for meeting the modeled energy performance for this computer analysis.

- PV exception 2: No PV required when minimum PV size (Section 150.1(c)14) < 1.8 kWdc (0 kW)
- IAQ Ventilation System Heat Recovery: minimum 70 SRE and 73 ASRE
- Window overhangs and/or fins
- Electric water heater exception - Exception 2 to Section 150.1(c)8
- Point of use

NOTICE: This document has been generated by California Home Energy Efficiency Rating Services (CHEERS) using information uploaded by third parties not affiliated with or related to CHEERS. Therefore, CHEERS is not responsible for, and cannot guarantee, the accuracy or completeness of the information contained in this document.

ECC FEATURE SUMMARY

The following is a summary of the features that must be field-verified by a certified ECC Rater as a condition for meeting the modeled energy performance for this computer analysis. Additional detail is provided in the building tables below. Registered CF2Rs and CF3Rs are required to be completed in the ECC Registry

- Indoor air quality ventilation
- Kitchen Exhaust
- Verified Refrigerant Charge
- Verified heat pump rated heating capacity

NOTICE: This document has been generated by California Home Energy Efficiency Rating Services (CHEERS) using information uploaded by third parties not affiliated with or related to CHEERS. Therefore, CHEERS is not responsible for, and cannot guarantee, the accuracy or completeness of the information contained in this document.

Compliance Summary

	Long Term System Cost (LSC)[1]		Source Energy Use	Peak Cooling**
	Efficiency[2] ($/ft²-yr)	Total[3] ($/ft²-yr)	Total[3] (kBtu/ft²-yr)	Electricity (kWh)
Standard Design	105.94	242.8	88.57	172
Proposed Design				
NORTH	103.13	239.94	57.92	109
EAST	104.43	241.37	57.9	117
SOUTH	103.5	240.46	57.77	123
WEST	104.77	241.61	58.18	135
Compliance Margins				
NORTH	2.81	2.86	30.65	63
EAST	1.51	1.43	30.67	55
SOUTH	2.44	2.34	30.8	49
WEST	1.17	1.19	30.39	37

RESULT*: Complies

[1]Long-term System Cost (LSC) is a 30-year present value cost to California's energy system. LSC is not a predicted utility bill.
[2]Efficiency measures include energy efficient improvements such as better building envelope and more efficient mechanical equipment
[3]Total includes the sum of efficiency measures, solar photovoltaic (PV) measures and battery storage measures
* Building complies when Proposed Design is equal to or less than Standard Design in all applicable compliance categories
** Peak cooling represents 130% of the standard design building peak energy use for Climate Zone 12.

PV System(s) removed due to Reduced PV Requirement of 0 kWdc
Proposed PV Capacity Scaling: North (0.00 kWdc) East (0.00 kWdc) South (0.00 kWdc) West (0.00 kWdc)
Standard Design PV Capacity: 0.00 kWdc

NOTICE: This document has been generated by California Home Energy Efficiency Rating Services (CHEERS) using information uploaded by third parties not affiliated with or related to CHEERS. Therefore, CHEERS is not responsible for, and cannot guarantee, the accuracy or completeness of the information contained in this document.

LSC AND SOURCE ENERGY COMPLIANCE RESULTS FOR PERFORMANCE COMPONENTS

Energy Use	Standard Design Source Energy (kBtu/ft² -yr)	Standard Design LSC[1] ($/ft² -yr)	Proposed Design Source Energy (kBtu/ft² -yr)	Proposed Design LSC[1] ($/ft² -yr)	Compliance Margin Source (kBtu/ft² -yr)	Compliance Margin LSC[1] ($/ft² -yr)
Space Heating	2.69	6.65	2.54	6.21	0.15	0.44
Space Cooling	2.52	17.01	2.01	14.64	0.51	2.37
IAQ Ventilation	0.68	2.66	0.68	2.66	0	0
Water Heating	48.81	79.62	18.82	79.62	29.99	0
Self Utilization/Flexibility Credit			0	0	0	0
North Facing Efficiency Compliance Total	**54.7**	**105.94**	**24.05**	**103.13**	**30.65**	**2.81**
Space Heating	2.69	6.65	2.33	5.68	0.36	0.97
Space Cooling	2.52	17.01	2.17	16.47	0.35	0.54
IAQ Ventilation	0.68	2.66	0.68	2.66	0	0
Water Heating	48.81	79.62	18.82	79.62	29.99	0
Self Utilization/Flexibility Credit			0	0	0	0
East Facing Efficiency Compliance Total	**54.7**	**105.94**	**24**	**104.43**	**30.7**	**1.51**

NOTICE: This document has been generated by California Home Energy Efficiency Rating Services (CHEERS) using information uploaded by third parties not affiliated with or related to CHEERS. Therefore, CHEERS is not responsible for, and cannot guarantee, the accuracy or completeness of the information contained in this document.

LSC AND SOURCE ENERGY COMPLIANCE RESULTS FOR PERFORMANCE COMPONENTS

Energy Use	Standard Design Source Energy (kBtu/ft² -yr)	Standard Design LSC[1] ($/ft² -yr)	Proposed Design Source Energy (kBtu/ft² -yr)	Proposed Design LSC[1] ($/ft² -yr)	Compliance Margin Source (kBtu/ft² -yr)	Compliance Margin LSC[1] ($/ft² -yr)
Space Heating	2.69	6.65	2.18	5.34	0.51	1.31
Space Cooling	2.52	17.01	2.17	15.88	0.35	1.13
IAQ Ventilation	0.68	2.66	0.68	2.66	0	0
Water Heating	48.81	79.62	18.82	79.62	29.99	0
Self Utilization/Flexibility Credit			0	0	0	0
South Facing Efficiency Compliance Total	**54.7**	**105.94**	**23.85**	**103.5**	**30.85**	**2.44**
Space Heating	2.69	6.65	2.52	6.21	0.17	0.44
Space Cooling	2.52	17.01	2.28	16.28	0.24	0.73
IAQ Ventilation	0.68	2.66	0.68	2.66	0	0
Water Heating	48.81	79.62	18.82	79.62	29.99	0
Self Utilization/Flexibility Credit			0	0	0	0
West Facing Efficiency Compliance Total	**54.7**	**105.94**	**24.3**	**104.77**	**30.4**	**1.17**

NOTICE: This document has been generated by California Home Energy Efficiency Rating Services (CHEERS) using information uploaded by third parties not affiliated with or related to CHEERS. Therefore, CHEERS is not responsible for, and cannot guarantee, the accuracy or completeness of the information contained in this document.

ENERGY USE INTENSITY

	Standard Design (kBtu/ft² - yr)	Proposed Design (kBtu/ft² - yr)	Margin (kBtu/ft² - yr)	Margin Percentage
North Facing				
Gross EUI[1]	123.9	122.76	1.14	0.92
Net EUI[2]	123.9	122.76	1.14	0.92
East Facing				
Gross EUI[1]	123.9	123.79	0.11	0.09
Net EUI[2]	123.9	123.79	0.11	0.09
South Facing				
Gross EUI[1]	123.9	123.26	0.64	0.52
Net EUI[2]	123.9	123.26	0.64	0.52
West Facing				
Gross EUI[1]	123.9	123.76	0.14	0.11
Net EUI[2]	123.9	123.76	0.14	0.11

Notes
1. Gross EUI is Energy Use Total (not including PV) / Total Building Area.
2. Net EUI is Energy Use Total (including PV) / Total Building Area.

NOTICE: This document has been generated by California Home Energy Efficiency Rating Services (CHEERS) using information uploaded by third parties not affiliated with or related to CHEERS. Therefore, CHEERS is not responsible for, and cannot guarantee, the accuracy or completeness of the information contained in this document.

REQUIRED PV SYSTEMS

01	02	03	04	05	06	07	08	09	10	11	12
DC System Size (kWdc)	**Exception**	**Module Type**	**Array Type**	**Power Electronics**	**CFI**	**Azimuth (deg)**	**Tilt Input**	**Array Angle (deg)**	**Tilt: (x in 12)**	**Inverter Eff. (%)**	**Annual Solar Access (%)**
0	No PV - required PV less than 1.8kWdc	Standard (14-17%)	Fixed	none	true	n/a	n/a	n/a	n/a	n/a	

BUILDING - FEATURES INFORMATION

01	02	03	04	05	06	07
Project Name	**Conditioned Floor Area (ft²)**	**Number of Dwelling Units**	**Number of Bedrooms**	**Number of Zones**	**Number of Ventilation Cooling Systems**	**Number of Water Heating Systems**
Trudy 150sf Detached ADU	150	1	1	1	0	1

ZONE INFORMATION

01	02	03	04	05	06	07
Zone Name	**Zone Type**	**HVAC System Name**	**Zone Floor Area (ft²)**	**Avg. Ceiling Height**	**Water Heating System 1**	**Status**
ADU	Conditioned	HVAC System 1	150	9	DHW System 1	New

OPAQUE SURFACES SUMMARY

01	02	03	04	05	06	07	08
Name	**Zone**	**Construction**	**Azimuth**	**Orientation**	**Gross Area (ft²)**	**Window and Door Area (ft2)**	**Tilt (deg)**
ADU Front Wall	ADU	2x6, R-23+13	0	Front	180	42	90
ADU Left Wall	ADU	2x6, R-23+13	90	Left	86	16	90
ADU Back Wall	ADU	2x6, R-23+13	180	Back	150	6	90
ADU Right Wall	ADU	2x6, R-23+13	270	Right	86	0	90

NOTICE: This document has been generated by California Home Energy Efficiency Rating Services (CHEERS) using information uploaded by third parties not affiliated with or related to CHEERS. Therefore, CHEERS is not responsible for, and cannot guarantee, the accuracy or completeness of the information contained in this document.

OPAQUE SURFACES - CATHEDRAL CEILINGS

01	02	03	04	05	06	07	08	09	10
Name	**Zone**	**Construction**	**Azimuth**	**Orientation**	**Area (ft²)**	**Skylight Area (ft²)**	**Roof Rise (x in 12)**	**CRRC Rated Roof Reflectance**	**CRRC Rated Roof Emittance**
Cathedral Ceiling	ADU	2x12, R-38	180	Back	150	0	2	0.1	0.85

FENESTRATION / GLAZING

01	02	03	04	05	06	07	08	09	10	11
Name	**Type**	**Surface**	**Orientation**	**Azimuth**	**Mult.**	**Area (ft²)**	**U-factor**	**SHGC**	**Rating Source**	**Exception to 150.0 (q)***
F-Window 1	Window	ADU Front Wall	Front	0	1	16	0.25	0.21	NFRC	☐
F-Window 2	Window	ADU Front Wall	Front	0	1	6	0.25	0.21	NFRC	☐
Entry door glass	Window	ADU Front Wall	Front	0	1	5	0.27	0.23	NFRC	☐
L-Window 1	Window	ADU Left Wall	Left	90	1	16	0.25	0.21	NFRC	☐
B-Window 1	Window	ADU Back Wall	Back	180	1	6	0.25	0.21	NFRC	☐

**Project includes fenestration not subject to maximum U-factor requirement per Exception 1 / Exception 2 / Exception 3 to Section 150.0(q).*

Total North Facing Fenestration	27
Total East Facing Fenestration	16
Total South Facing Fenestration	6
Total West Facing Fenestration	0

NOTICE: This document has been generated by California Home Energy Efficiency Rating Services (CHEERS) using information uploaded by third parties not affiliated with or related to CHEERS. Therefore, CHEERS is not responsible for, and cannot guarantee, the accuracy or completeness of the information contained in this document.

OPAQUE DOORS

01	02	03	04	05
Name	**Side of Building**	**Area (ft²)**	**U-factor**	**NFRC Rating Req.**
Entry Door	ADU Front Wall	15	0.2	Yes

SLAB FLOORS

01	02	03	04	05	06	07
Name	**Zone**	**Area (ft²)**	**Perimeter (ft)**	**Edge Insul. R-value**	**Edge Insul. Depth**	**Heated**
Slab On Grade	ADU	150	56.5	none	0	No

OPAQUE SURFACE CONSTRUCTIONS

01	02	03	04	05	06	07	08	09
Construction Name	**Surface Type**	**Construction Type**	**Framing**	**Total Cavity R-value**	**Interior / Exterior Continuous R-value**	**U-factor**	**Assembly Layers**	**Non-Std Spray Foam**
2x6, R-23+13	Exterior Walls	Wood Framed Wall	2x6 @ 16 in. O. C.	R-23	None / 13	0.032	Inside Finish: Gypsum Board Cavity / Frame: R-23 / 2x6 Sheathing / Insulation: R-13 Sheathing Exterior Finish: All Other Siding	☐
2x12, R-38	Cathedral Ceilings	Wood Framed Ceiling	2x12 @ 24 in. O. C.	R-38	None / None	0.029	Roofing: Light Roof (Asphalt Shingle) Roof Deck: Wood Siding/sheathing/decking Cavity / Frame: R-38 / 2x12 Inside Finish: Gypsum Board	☐

NOTICE: This document has been generated by California Home Energy Efficiency Rating Services (CHEERS) using information uploaded by third parties not affiliated with or related to CHEERS. Therefore, CHEERS is not responsible for, and cannot guarantee, the accuracy or completeness of the information contained in this document.

That ADU Guy LLC

THATADUGUY.COM

Designer signature,

C P Dharmasenage

NEW ACCESSORY DWELLING UNIT

REVISIONS

No.	Description	Date

TITLE 24

Project number	N/A
Date	05/24/26
Drawn by	C P DHARMASENAGE
Checked by	Checker

T-24-1

Scale

11/15/2026 10:44:29 AM

WATER HEATING SYSTEMS

01	02	03	04	05	06	07	08	09
Name	System Type	Distribution Type	Water Heater Name	Number of Units	Solar Heating System	Compact Distribution	ECC Verification	Water Heater Name (#)
DHW System 1	Domestic Hot Water (DHW)	Point of Use	Electric Resistance	1	n/a	None	n/a	Electric Resistance (1)

WATER HEATERS

01	02	03	04	05	06	07	08	09	10	11	12	13
Name	Heating Element Type	Tank Type	# of Units	Tank Vol. (gal)	Heating Efficiency Type	Efficiency	Rated Input Type	Input Rating or Pilot	Tank Insulation R-value (Int/Ext)	Standby Loss or Recovery Eff	1st Hr. Rating or Flow Rate	Tank Location
Electric Resistance	Electric Resistance	Consumer Instantaneous	1	0	UEF	0.92	kW	12	0	99	2	n/a

HVAC - HEAT PUMPS

01	02	03	04	05	06	06b	07	08	09	10	11	12	13	14
Name	System Type	Number of Units	Heating					Cooling			Airflow Target	Fan Power (Watts/CFM)	Variable Speed	Zonal Control
			Heating Efficiency Type	HSPF/HSPF2/COP	Cap 47	Cap 17	Backup	Cooling Efficiency Type	SEER/SEER2	EER/EER2/CEER				
MiniSplit	Ductless MiniSplit HP	1	HSPF2	7.5	10900	6700	n/a	EER2/SEER2	14.3	11.7	0	0	☒	☐

INDOOR AIR QUALITY (IAQ) FANS

01	02	03	04	05	06	07	08
Dwelling Unit	Airflow (CFM)	Fan Efficacy (W/CFM)	IAQ Fan Type	Includes Heat/Energy Recovery?	IAQ Recovery Effectiveness - ASRE	Includes Fault Indicator Display?	Status
SFam IAQVentRpt	19	0.35	Exhaust	No	n/a / n/a	No	

DOCUMENTATION AUTHOR'S DECLARATION STATEMENT

I. I certify that this Certificate of Compliance documentation is accurate and complete.

Documentation Author Name: Derek Sherrell	Documentation Author Signature: Derek Sherrell
Company: That ADU Guy, LLC	Signature Date: 11/14/2026
Address: 1404 Talent Ave	CEA/AEA/ECC Certification Identification (if applicable):
City/State/Zip: Talent, OR 97540	Phone: 5412387073

RESPONSIBLE PERSON'S DECLARATION STATEMENT

I certify the following under penalty of perjury, under the laws of the State of California:

1. The information provided on this Certificate of Compliance is true and correct.
2. I am eligible under Division 3 of the Business and Professions Code to accept responsibility for the building design or system design identified on this Certificate of Compliance (responsible designer).
3. The energy features and performance specifications, materials, components, and manufactured devices for the building design or system design identified on this Certificate of Compliance conform to the requirements of Title 24, Part 1 and Part 6 of the California Code of Regulations.
4. The building design features or system design features identified on this Certificate of Compliance are consistent with the information provided on other applicable compliance documents, worksheets, calculations, plans and specifications submitted to the enforcement agency for approval with this building permit application.
5. I understand that a registered copy of this Certificate of Compliance shall be made available with the building permit(s) issued for the building and shall be made available to the enforcement agency for all applicable inspections. I will take the necessary steps to fulfill this requirement.
6. I understand that a registered copy of this Certificate of Compliance is required to be included with the documentation the builder provides to the building owner at occupancy. I will take the necessary steps to fulfill this requirement.

Responsible Designer Name: Chirantha Dharmasenage	Responsible Designer Signature: Chirantha Dharmasenage
Company: customaduplans	Date Signed: 11/14/2026
Address: 1404 Talent Ave	License:
City/State/Zip: Talent, OR 97540	Phone: +94779609802

Digitally signed by California Home Energy Efficiency Rating Services (CHEERS). This digital signature is provided in order to secure the content of this registered document, and in no way implies registration provider responsibility for the accuracy of the information.

That ADU Guy LLC

THATADUGUY.COM

Designer signature,
C P Dharmasenage

NEW ACCESSORY DWELLING UNIT

REVISIONS

No.	Description	Date

TITLE 24

Project number	N/A
Date	05/24/26
Drawn by	C P DHARMASENAGE
Checked by	Checker

T-24-2

Scale

11/15/2026 10:44:30 AM